# POWERING INFRASTRUCTURE

Telecom/Datacom, Wired Networks and Data Storage

intersil™

## A HERITAGE OF POWERING INNOVATION

Learn how Intersil's power management technologies have transformed the semiconductor industry and are ideal for today's evolving infrastructure, industrial and mobile consumer markets at **intersil.com/power**

# POWERING INFRASTRUCTURE

The increased amount of data and video being transmitted via the cloud has placed huge bandwidth and power demands on the entire infrastructure market. More than ever, designers need a power partner with the expertise to improve their system's efficiency and simplify the design process.

Intersil's comprehensive portfolio of digital power management DC/DC controllers and power modules are designed to provide best-in-class efficiency and help streamline the design process.

Intersil's leading-edge family of digital power products include both full digital control loop and hybrid digital solutions, all of which can be configured using Intersil's PowerNavigator™ — the industry's most intuitive code-free configuration tool.

Intersil's power modules are complete, fully encapsulated power solutions built on copper frames using the latest packaging technology to deliver superior thermal performance. With Intersil modules, power circuit design can now be completed with just a few external components.

Intersil's customers are recognized as innovators in their chosen markets, and our IC solutions are forming the building blocks of the latest devices adding intelligence, mobility and true energy efficiency.

**Cloud Infrastructure**
Digital Power
Power Modules
Core Power
Switching Regulators
FET Drivers

**Medical**
Power Modules
Switching Regulators
FPGA Power

**Security**
Switching Controllers
Hot Plug
Encoders
Video Compression

**Computing**
Core Power
Memory Power
Display Power
LDOs
Hot Plug

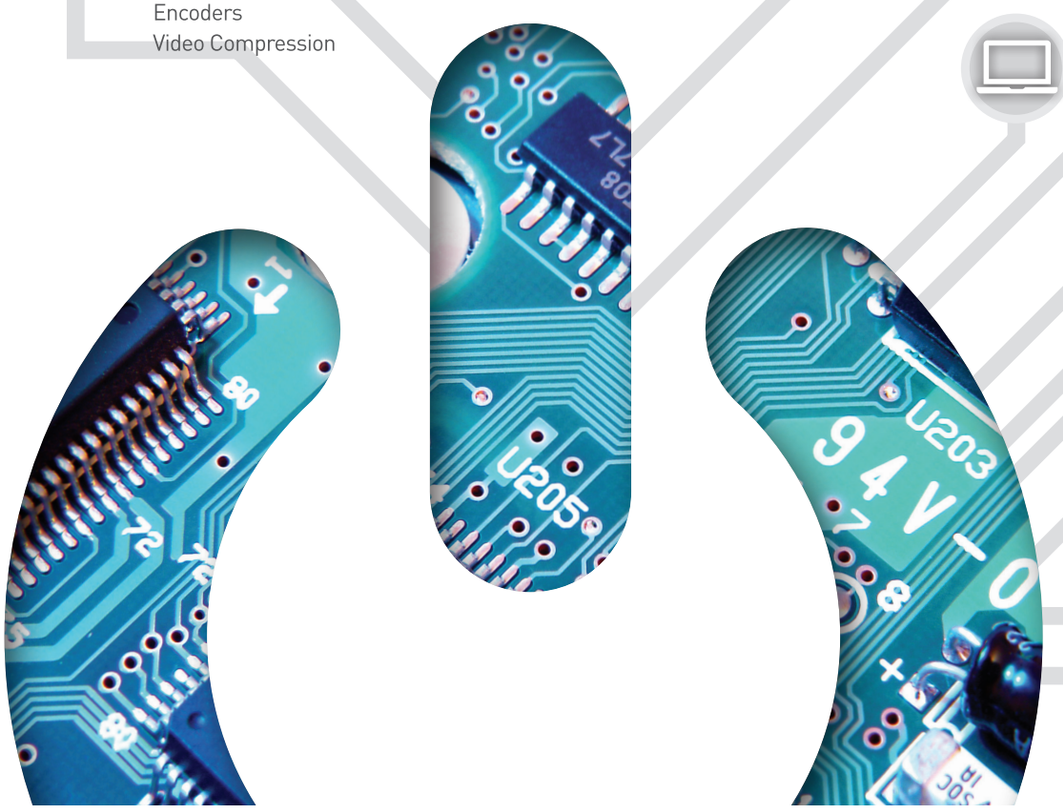

**Rad Hard (Space)**
FPGA Power
Switching Regulators
FET Drivers

**Telecom/Datacom**
Digital Power
Switching Controllers
Power Modules
FET Drivers
FPGA Power
Point-of-Load

**Wired Network**
Digital Power
Core Power
Power Modules
Switching Regulators
FET Drivers

**Consumer/Mobile**
Buck-Boost Regulators
Battery Management
LDOs
Display/Backlight Drivers
Optical Sensors

**Instrumentation/ Measurement**
Power Modules
Switching Regulators
FPGA Power

**Military/Hi-Reliability**
FPGA Power
Linear Regulators
FET Drivers
SMD

**Industrial Control**
Power Modules
Digital Power (full, hybrid)
Core Power
Switching Regulators
FET Drivers

**Automotive**
HEV/EV Cell Balancing
PWM Controllers
Video Decoders

# CONTENTS

**Understanding Infrastructure Power.....4**

**Design Tools and Support .....5**

**Application Block Diagrams.....6**
- Cloud Infrastructure ..... 6
- Telecom/Datacom ..... 7
- Storage Area Network ..... 8
- RAID Controller Card ..... 9

**Digital Power .....10**

**Power Modules .....14**

**Power Management Selection Tables ....18**
- Isolated Power..... 18
  - Power Factor Controllers..... 18
  - Isolated PWM Controllers ..... 18
  - FET Drivers..... 20
- Non-Isolated Power..... 22
  - Digital Power ..... 22
  - Power Modules..... 22
  - Non-Isolated PWM Controllers..... 23
  - Int. FET Switching Regulators..... 27
  - PMIC ..... 28
  - LDO / Linear Regulators ..... 28
- Power Supply Control ..... 29
  - Hot Plug/ORing..... 29
  - Voltage Monitors..... 29
  - Power Sequencers ..... 30

**Signal Path Products .....31**

**Application Block Diagrams.....32**
- Blade Server..... 32
- Cell Basestation ..... 33

**Signal Path Selection Tables.....34**
- Real-Time Clock ..... 34
- Digital Potentiometers ..... 35
- Voltage References..... 36
- Current Sense Amplifiers..... 37
- High Speed ADC ..... 37
- Interface ..... 38

# UNDERSTANDING INFRASTRUCTURE POWER

A typical power supply consists of many conversion and housekeeping stages before it is usable by the actual load. The required stages and their design complexity varies drastically depending on the input power source and the specific needs of the end applications and the load being powered up.

Intersil has highly-integrated isolated and non-isolated solutions that address every stage of the power chain for infrastructure, from high-voltage AC input, AC/DC converters, and DC/DC converters and regulators.

In addition to power conversion, Intersil also provides a wide range of housekeeping functions such as sequencing, monitoring, failure detection and fault protection to improve system reliability and reduce down time.

## LEADERSHIP POWER TECHNOLOGY

Learn how Intersil's digital power solutions are changing the infrastructure market at **intersil.com/power**

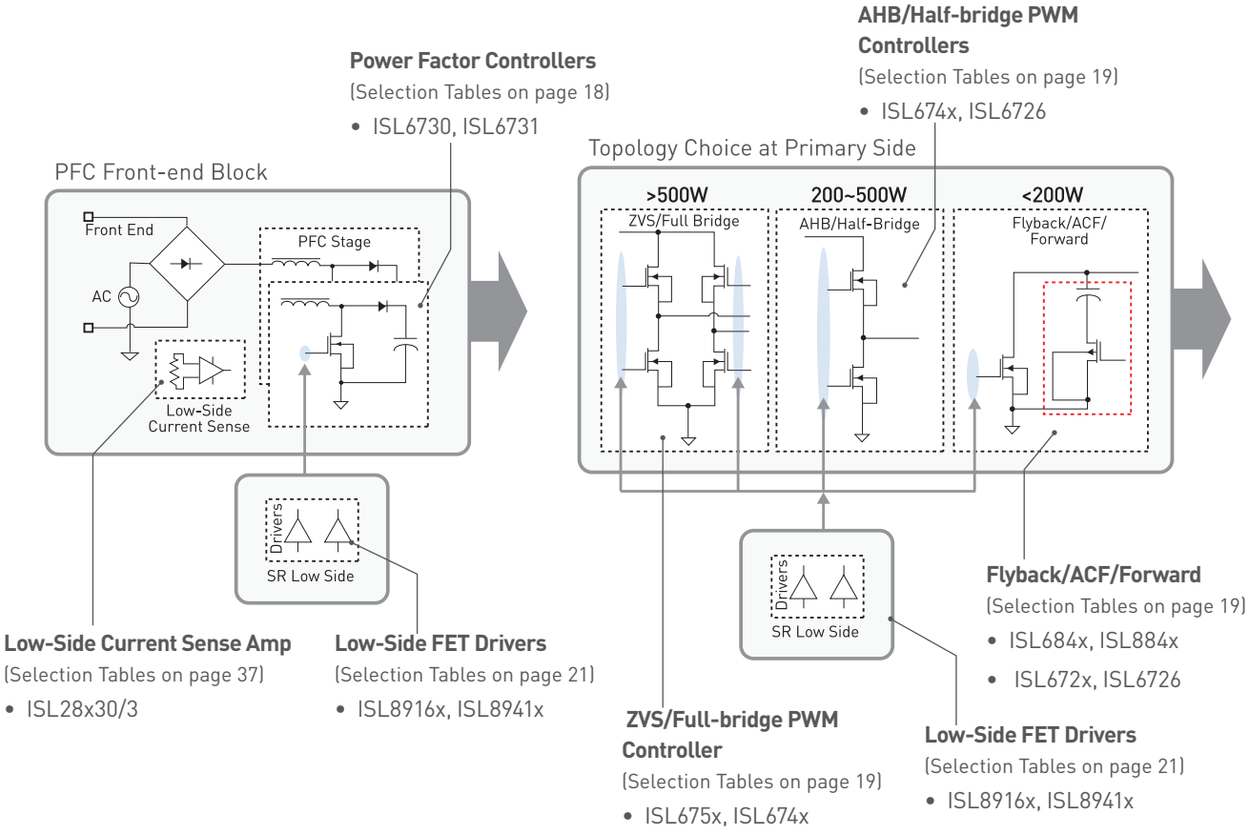

# DESIGN TOOLS AND SUPPORT

Go to intersil.com/tools for design tools and resources.

Browse our library of reference designs, evaluation boards, and demo boards.

Intersil's iSim interactive web-based design tool helps you select and simulate power and precision analog devices.

Download IBIS, SPICE, macro, Saber and text file design models.

Watch the latest videos and tutorials at Intersil's Video Center.

Browse the latest application block diagrams and selection tables.

Subscribe to receive product change notifications for the devices you are using in your design.

Ask an Expert and get answers from an Intersil application support professional within one business day.

Secondary Side Rectification Topology

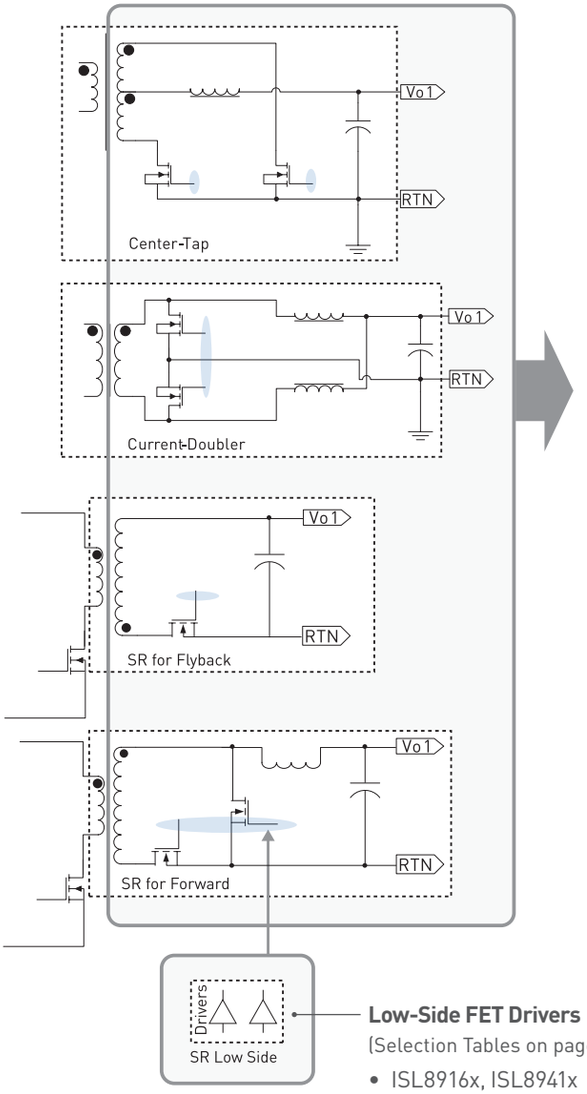


**Low-Side FET Drivers**
(Selection Tables on page 21)
- ISL8916x, ISL8941x

DC/DC Non-isolated Stage

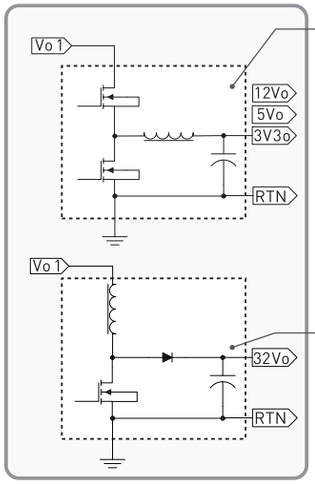


**DC/DC Non-Isolated Switching Regulators**
(Selection Tables on page 23)
- ISL8105, ISL6431C
- ISL9443/4, ISL6440/6
- ISL6558, ISL8120/6, ISL8115
- ISL85402, ISL8500/1/2
- ZL6105 (digital+Phase drop)

**PWM Controllers**
(Selection Tables on page 23)
- ISL8130, ISL6420B

**Digital Potentiometers**
(Selection Tables on page 35)

House-Keeping Block

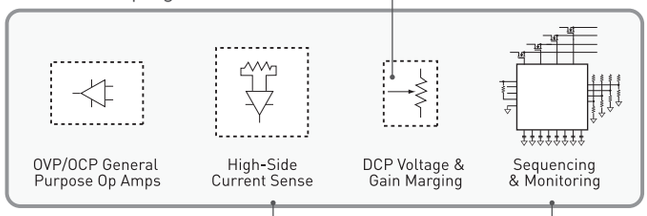


**Current Sense Amp**
(Selection Tables on page 37)

**Sequencing & Monitoring**
(Selection Tables on page 30)

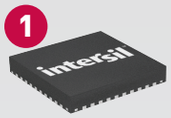


**ISL6374: EAPP 4-phase PWM controller for VR12.5 and VR12.0 applications with SVID Bus**

Compliant to Intel VR12.5/VR12 specifications and controls the microprocessor core or memory voltage regulator.

- EAPP multi-phase modulator
- Auto phase dropping
- Low operation current
- Catastrophic failure protections

**See Selection Table on page 26.**

**ISL8541X: Intersil's new family of pin-compatible, 3V to 36V synchronous buck regulators simplifies design, improves efficiency and reduces BOM cost.**

Now with three output current options to choose from, reuse of proven circuit or board designs has never been easier.

- 3 pin-compatible output current options: 500mA, 800mA or 1A
- Adjustable output voltage range from 0.6V to 95% of $V_{IN}$
- Selectable PFM or forced PWM for superior light load efficiency

**See Selection Table on page 27.**

# APPLICATION BLOCK DIAGRAMS

## CLOUD INFRASTRUCTURE
### (400V TO 12V BUS)

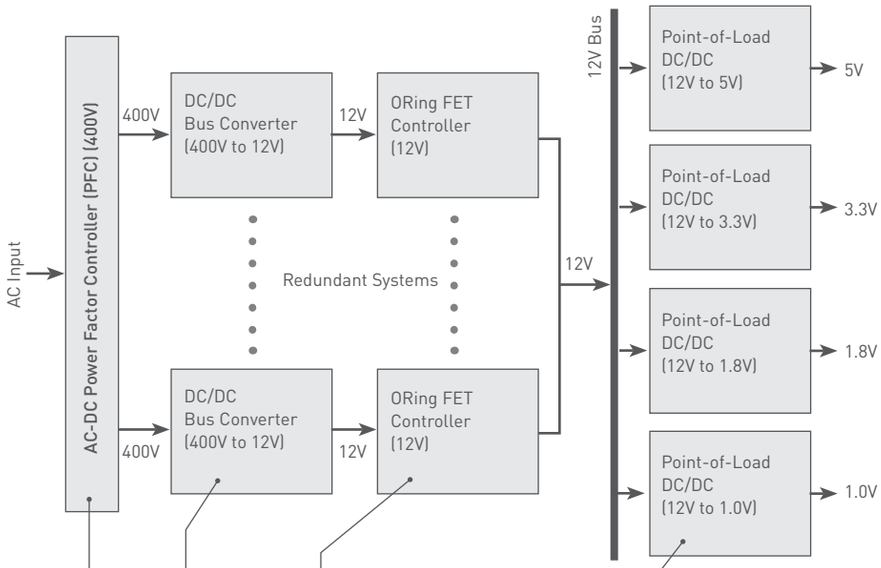


**Power Factor Controllers**
(Selection Tables on page 18)

- ISL673X

**ORing FET Controllers**
(Selection Tables on page 29)

- ISL6146

**Isolated PWM Controllers**
(Selection Tables on page 19)

- ISL6551(ZVS)
- ISL6752/53/54/55 (ZVS)
- ISL6744/45 (Bus Converter)
- ISL6726 (ACF)

**Digital Power**
(Selection Tables on page 22)

- ZL8800

**Power Modules**
(Selection Tables on page 22)

1 • ISL8225M

**Core Power Controllers**
(Selection Tables on page 26)

- ISL6374

**Non-Isolated PWM Controllers**
(Selection Tables on page 23)

- ISL944X, ISL644X
- ISL6420B, ISL8118, ISL8104/5/6
- ISL8120/26

**Integrated FET Regulators**
(Selection Tables on page 27)

- ISL80XX
- ISL8500X
- 2 ISL8541X

## TELECOM/DATACOM
## (400V TO 48V TO 12V BUS)

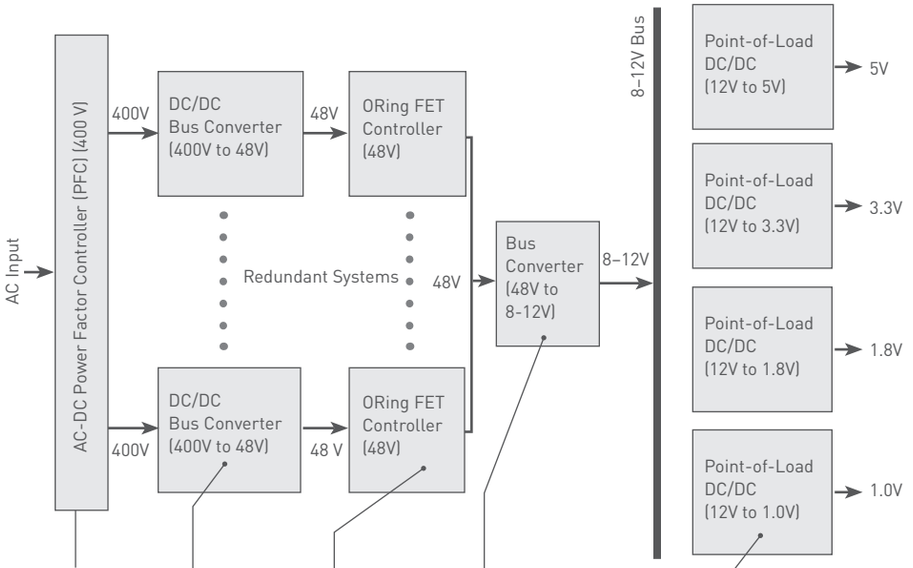


**Power Factor Controllers**
(Selection Tables on page 18)

- ISL673X

**ORing FET Controllers**
(Selection Tables on page 29)

3 • ISL6146

**Isolated PWM Controllers**
(Selection Tables on page 19)

- ISL6551(ZVS)
- ISL6752/53/54/55 (ZVS)
- ISL6744/45 (Bus Converter)
- ISL6726 (ACF)

**Bus Converter**

(Selection Tables on page 21)

4 • ISL89163

**Digital Power**
(Selection Tables on page 22)

- ZL8800

**Power Modules**
(Selection Tables on page 22)

- ISL8225M

**Core Power Controllers**
(Selection Tables on page 26)

**Non-Isolated PWM Controllers**
(Selection Tables on page 23)

- ISL944X, ISL644X
- ISL6420B, ISL8118, ISL8104/5/6
- ISL8120/26

**Integrated FET Regulators**
(Selection Tables on page 27)

- ISL80XX
- ISL8500X
- ISL8541X

**ISL6146: Low voltage ORing MOSFET controller is the ideal solution for cloud computing, telecom power distribution systems.**

- ORing down to < 1V and up to 20V
- Programmable voltage window compliant operation
- $V_{IN}$ transient protection rating to +24V

**Family Selection Table on page 29.**

**ISL89163, ISL89164, ISL89165: Industry's fastest dual 6A MOSFET drivers.**

- Dual output, 6A peak currents, can be paralleled
- Dual AND-ed input logic, (INput and ENable)
- Typical ON-resistance <1Ω
- Specified Miller plateau drive currents
- Very low thermal impedance ($\theta_{JC}$ = 3°C/W)
- Hysteretic input logic levels for 3.3V CMOS, 5V CMOS, TTL and logic levels Proportional to $V_{DD}$
- 20ns rise and fall time driving a 10nF load

**Family Selection Table on page 21.**

**ISL6446A: Dual PWM/linear controller provides industry's most efficient, flexible single-chip solution.**

- Wide 4.5V to 24V input and 0.6V to 20V output operating ranges serve variety of applications
- Programmable switching from 100kHz to 2.5MHz enables wide range of component choices to optimize designs

**Family Selection Table on page 25.**

**ZL8800: Compensation-free ChargeMode™ digital control loop simplifies design and extends Intersil's leading edge digital power platform.**

- 2-channel/2-phase digital DC/DC controller
- Integrated LDOs enables single supply 12V operation
- DDC bus enables sequencing and fault management across multiple devices
- Non-volatile memory allows for storage of all configuration and setup parameters

**See Digital Power Products on page 22.**

**Family Selection Table on page 22.**

# APPLICATION BLOCK DIAGRAMS

## STORAGE AREA NETWORK

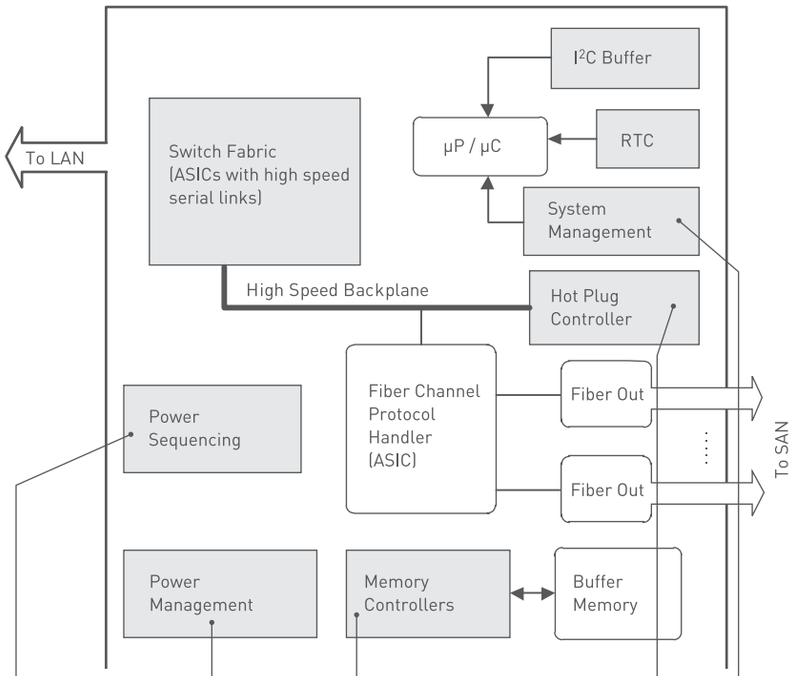


**Power Sequencers**
(Selection Tables on page 30)
- ISL6130
- ISL8705A

**PMICS**
(Selection Tables on page 28)
- ISL80083

**PWM and Linear Controllers**
(Selection Tables on page 25)
- 1 ISL6446(A)

**Voltage Monitors**
(Selection Tables on page 29)
- ISL88042
- ISL88001/2/3
- ISL88016/17

**Synchronous Buck Regulators**
(Selection Tables on page 27)

**PWM Regulators**
(Selection Tables on page 26)

**Digital Power**
(Selection Tables on page 22)
- 2 ZL8800

**Hot Plug Controllers**
(Selection Tables on page 29)
- ISL6115A
- ISL6120
- ISL6117/16/15

## RAID CONTROLLER CARD

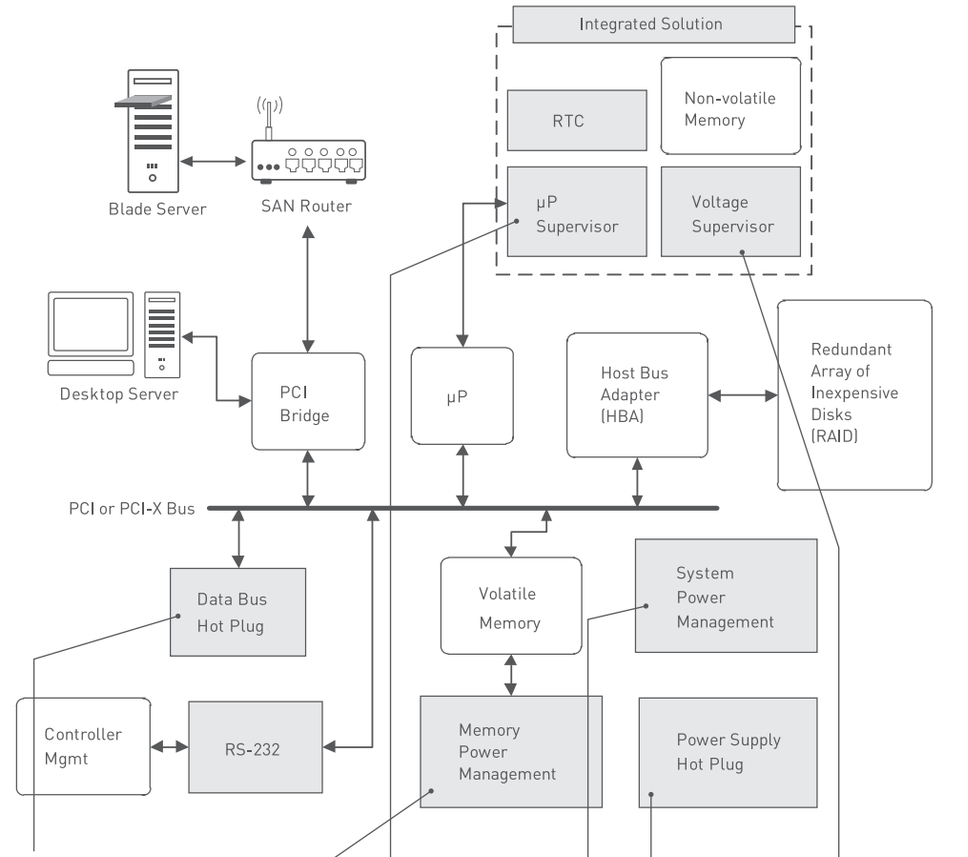


**Hot Plug Controllers**
(Selection Tables on page 29)

**µP Supervisors**
(Selection Tables on page 29)

- ISL88015/13
- ISL88813/716/706

**Voltage Supervisors**
(Selection Tables on page 29)

- ISL88015/13
- ISL88705/706/716

**Power Supply Controllers**
(Selection Tables on page 25)

- ISL6237/36A
- ISL6236
- ISL8112

**PWM Controllers**
(Selection Tables on page 25)

- ISL6444(A)

**Synchronous Boost Converters**
(Selection Tables on page 27)

3 • ISL9113A

**Synchronous Buck Regulators**
(Selection Tables on page 27)

- ISL8025A

**Digital Power**
(Selection Tables on page 22)

4 • ZL8800

**Hot Plug Controllers**
(Selection Tables on page 29)

- ISL6115A
- ISL6120
- ISL6117/16/15

3

**ISL9113A: Low input voltage and high efficiency synchronous boost converter with 1.3A Switch.**

- Low $R_{DSON}$ FET (0.2Ω N-FET and 0.35Ω P-FET) provide up to 95% efficiency
- High input current limit (1.3A)
- High switching frequency, 1.8MHz
- Available in fixed 5V and adjustable options

**Family Selection Table on page 27.**

4

**ISL8225M: Dual 15A/single 30A step-down power module delivers industry's best 100W in a tiny 2.9x2.9cm footprint.**

The ISL8225M's two 15A outputs may be used independently or combined to deliver a single 30A output.

- Up to 95% conversion efficiency
- 4.5V to 20V input voltage range
- 0.6V to 6V output voltage range

**See Power Module Products on page 22.**

**Family Selection Table on page 22.**

# DIGITAL POWER

Intersil digital power products combine a world-class digital power conversion architecture with power management logic in a single IC. They require minimal external circuitry, reducing board space requirements and simplifying the design process. The patented Zilker Labs™ technology from Intersil builds intelligence into the silicon, allowing the devices to be easily configured by using PMBus™ commands — which is greatly simplified with our proprietary PowerNavigator™ graphical interface software — or through pin-strap options. Intersil's digital power portfolio features full digital, hybrid and the industry's first fully encapsulated power modules. These modules address a wide range of operating conditions, allowing system designers to complete designs using parts from a single supplier.

### WHERE USED IN INFRASTRUCTURE

- Telecom/datacom equipment
- Servers/storage equipment
- Industrial computer/control equipment
- Test and measurement equipment
- FPGA/DSP/ASIC power supplies
- Power supply modules
- 5V and 12V distributed power systems

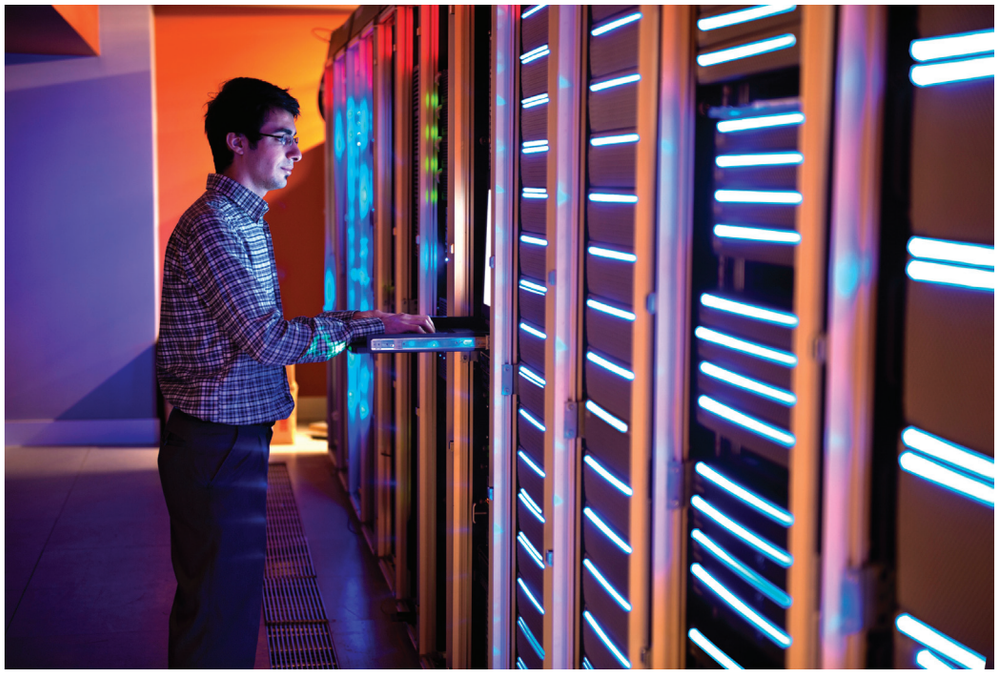

### KEY FEATURES AND BENEFITS

- Easy-to-design, flexible digital solution
- Can be used in a wide variety of applications
- Seamlessly combine devices to address a full range of system requirements
- High efficiency and fast transient response
- Adaptive performance optimization to increase efficiency
- Integrated power and fault management without additional components
- Easily configured by simple pin-straps, resistor connections or via I²C/SMBus interface
- Smaller footprint, fewer components

### POWER MANAGEMENT BENEFITS

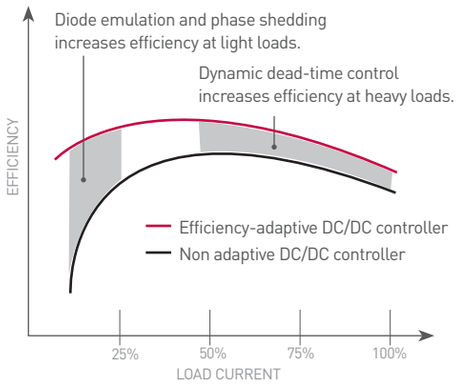


- High $V_{OUT}$ accuracy across line, load and temperature
- High current >40A per phase
- Active current sharing with phase add/drop
- Adaptive efficiency optimization
- Startup pre-bias protection
- External clock synchronization with phase interleaving

## DIGITAL POWER KNOWLEDGE CENTER

Get everything you need to get started using digital power at **intersil.com/DigiPowerTraining**

- Video tutorial series on how to use Intersil's PowerNavigator digital power configuration software
- PowerNavigator user's guide
- Free software download.
- Order your own USB to PMBus adapter
- Video series about new ZL8800 compensation-free full digital control loop technology
- Order your own dual-channel or dual-phase ZL8800 evaluation boards

### POWER CONVERSION BENEFITS

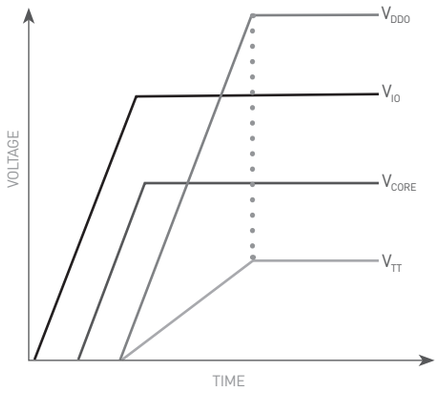


- Voltage tracking (50% / 100%)
- Autonomous output sequencing
- Adjustable voltage margining (5% / 10%)
- Voltage, current, temperature monitoring
- Configurable fault management
- Snapshot parametric data capture
- Interoperability with DDC bus
- I²C/SMBus interface, PMBus compatible

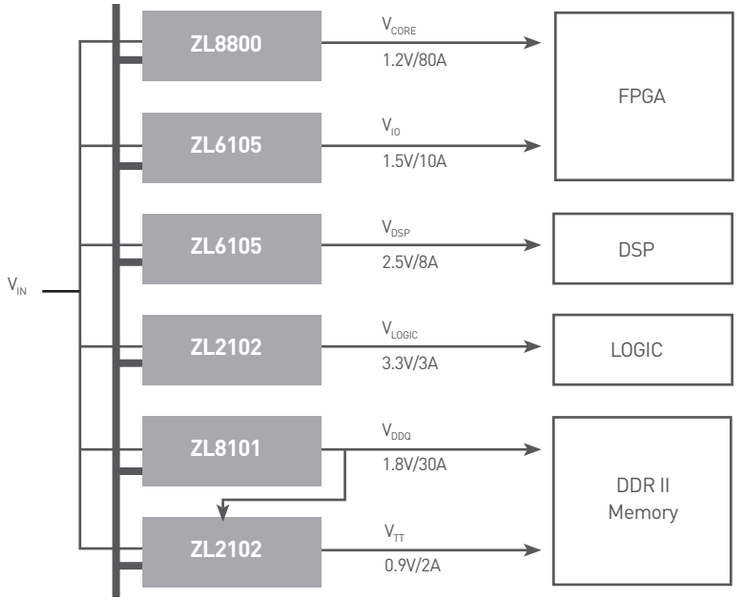

## GET ZL8800 DESIGN RESOURCES

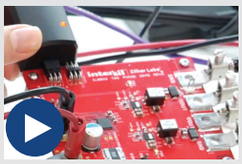

Watch video tutorials, get app notes, white papers and evaluation boards at **go.intersil.com/DigitalPower**

- Download Datasheet
- Read App Notes
- Order Demo Boards
- Watch Videos

### HIGHLIGHTED VIDEO TOPICS

- Introduction to ZL8800
- Click-and-drag sequencing
- ZL8800's compensation-free Control loop stability
- Understanding the ASCR gain and residual compensation
- Overvoltage and undervoltage protection schemes

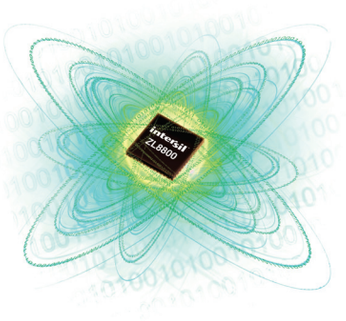


**ZL8800: Compensation-free ChargeMode™ digital control loop simplifies design and extends Intersil's leading edge digital power platform.**

Proprietary ChargeMode control loop technology delivers best-in-class transient response for digital Point of Loads (POLs), saving on output capacitance and board space, important benefits for the advanced power systems found in the latest generation of base-stations, routers, and similar infrastructure designs.

- 2-channel/2-phase digital DC/DC controller
- Integrated LDOs enable single supply 12V operation
- DDC bus enables sequencing and fault management across multiple devices
- Non-volatile memory allows for storage of all configuration and setup parameters

**ZL6105: Digital DC/DC with adaptive optimization algorithms delivers up to 96% power conversion efficiency and eliminates the need for manual compensation design work.**

- Auto compensating PID filter
- Adaptive light load efficiency Optimization
- 3V to 14V input range
- 0.54V to 5.5V output range (with margin)
- ±1% output voltage accuracy
- Internal 3A MOSFET drivers
- Fast load transient response
- Current sharing and phase interleaving

**ZL2102: Easy-to-use digital power regulator can be configured for most applications using only hardware pin straps to adjust switching frequency, output voltage, UVLO, soft start ramp/delay settings, sequencing options, and SMBus address.**

For more advanced configurations, the ZL2102 supports over 70 PMBus commands. Output voltage/current is factory calibrated.

This synchronous buck converter operates from a 4.5V to 14V input supply and provides from 0.54V to 5.5V output voltage at up to 6A.

- Integrated MOSFET Switches
- 6A continuous output current
- Adjustable 0.54V to 5.5V output range
- 4.5V to 14V input range
- Up to 90% efficiency
- Auto compensation for fast transient response
- SMBus compliant serial interface

**ZL6105: Digital PWM eliminates the need for complicated power supply managers and external discrete components.**

The ZL8101 is designed to be a flexible building block for DC power, used with either the ZL1505 MOSFET driver IC, the ISL6611 phase doubler IC, or DrMOS type devices. It can be easily adapted to designs ranging from a single-phase 4.5V input to a multi-phase supply operating from a 12V input.

- Efficient synchronous buck controller
- Adaptive performance optimization algorithms
- ±1% output voltage accuracy
- Auto compensation
- $I^2C$/SMBus interface, PMBus compatible
- Internal non-volatile memory (NVM)

**See complete Digital Power selection tables on page 22.**

# PowerNavigator™

Stop coding and start designing with Intersil's PowerNavigator software. Our intuitive graphical interface enables simple configuration and monitoring of multiple Digital-DC™ devices using your PC.

- Drag and drop system design
- Click and drag sequencing
- Command tool library
- Pre-loaded common configurations for FPGAs

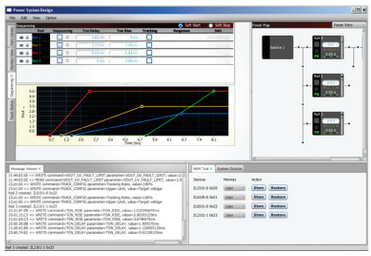

**Visual Sequencing**

Adjust power sequencing of multiple rails using graphical interface.

**Graphical Monitoring**

Easy to read displays to monitor entire system on a single page.

## START USING POWERNAVIGATOR

Get your free software today at **intersil.com/powernavigator**

- Download User's Guide
- Read App Notes
- Watch Videos

### VIDEO TUTORIAL TOPICS

- Introduction
- Software overview
- Set-up
- Monitoring and configuring
- Using PowerNavigator GUI
- Click-and-drag sequencing
- PMBus command library

# POWER MODULES

Intersil power modules are complete DC/DC power solutions which reduce design time, lower cost and save board space. With industry leading power technology, these modules offer small form factor, high efficiency and robust features such as digital control, current sharing and cascading up to six modules for high output power.

### WHERE USED IN INFRASTRUCTURE

- Telecom/datacom equipment
- Servers/storage equipment
- Industrial computer/control equipment
- Test and measurement equipment
- FPGA/DSP/ASIC power supplies
- Power supply modules
- 5V and 12V distributed power systems

### ANALOG POWER MODULES

**Simple**
Full integration means less complexity and more ease of design

**Dense**
Power output up to 100W in a single package

**Functional**
Versatile features such as soft start, fault protection and parallel module multi-phasing

**Rugged**

- Thermal molding compound allows for even heat distribution
- Large copper pads transfer heat efficiently
- Operates at full load across wide temperature range
- Leaded package allows pin access
- Optimized thermal packaging

## LEARN MORE ABOUT INTERSIL POWER MODULES

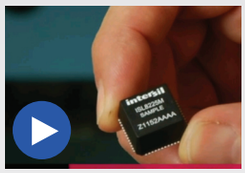

See videos about how Intersil's unique module architecture delivers unmatched thermal performance and simplifies design at **go.intersil.com/PowerModules**

### INTERSIL'S GROWING PORTFOLIO OF FULLY ENCAPSULATED POWER MODULES

**Analog**

| | | |
|---|---|---|
| 1V to 20V | | |
| | 4A out: | **ISL8204M** |
| | 6A out: | **ISL8206M** |
| | 10A out: | **ISL8201M** |
| 3V to 20V | | |
| | 10A out: | **ISL8200M** |
| 10V to 80V | | |
| | 4A out: | **ISL8216M** |

**Digital**

| | | |
|---|---|---|
| 4.5V to 13.2V | | |
| | 6A out: | **ZL9006M** |
| | 12A out: | **ZL9101M** |
| | 10A out: | **ZL9010M** |
| | 17A out: | **ZL9117M** |
| 4.5V to 14V | | |
| | 25A out: | **ISL8270M** |
| | 33A out: | **ISL8271M** |

## OPTIMIZED THERMAL PACKAGING

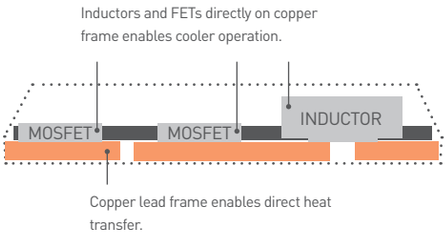


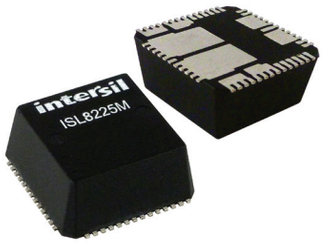


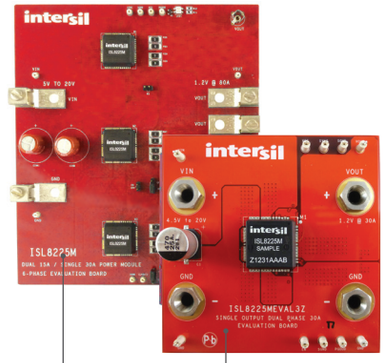


Three paralleled modules for 90A solution

High integration provides simple, board-saving design

**ISL8225M: Dual 15A/Single 30A Step-Down Power Module delivers industry's best 100W in a tiny 2.9x2.9cm footprint.**

The ISL8225M's two 15A outputs may be used independently or combined to deliver a single 30A output. Designing a high-performance board-mounted power supply has never been simpler as only a few external components are needed to create a very dense and reliable power solution.

- Up to 95% conversion efficiency
- 4.5V to 20V input voltage range
- 0.6V to 6V output voltage range
- 1.5% output voltage accuracy with differential remote sensing
- Up to six modules may be paralleled to support 180A output current
- Output over-voltage, over-current and over-temperature protection
- Full power operation without heat sinks or fans
- QFN package with exposed leads permits easy probing and visual solder inspection

### ULTIMATE DESIGN FLEXIBILITY AND POWER DENSITY

The ISL8225M can be interleaved with up to six modules for 12-phase, 180W solution.

**See complete Analog Power Module selection table on page 22.**

## GET ISL8225M DESIGN RESOURCES

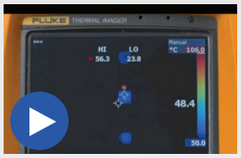

Watch video tutorials, get app notes, white papers and evaluation boards at go.intersil.com/PowerModules

- Download Datasheet
- Read App Notes
- Order Demo Boards
- Watch Videos

### HIGHLIGHTED VIDEO TOPICS

- The benefits of using a leaded package
- ISL8225M thermal performance

**ISL8216M: Intersil's first high voltage power module simplifies designs for applications up to 80V.**

All you need is the ISL8216M device, input and output capacitors and one resistor to program the output voltage for a complete high voltage design. This "off-the-shelf" unassisted implementation eliminates the design and manufacturing risks while dramatically improving time to market.

- Complete switch mode power supply in one package
- Wide input voltage range: 10V to 80V
- Output current 4A
- Programmable soft-start
- YNC and adjustable frequency 200kHz-600kHz
- Single resistor sets $V_{OUT}$ +2.5V up to +30V
- Setpoint accuracy ±1.5%
- Programmable overcurrent protection

**DIGITAL POWER MODULES**

Intersil offers an expanding portfolio of highly integrated POL DC/DC power modules in a innovative QFN style package. Intersil's DC/DC modules integrate most of the components required to build a DC/DC power supply into a single chip that offers reduced design cycle time, lower cost and PCB space savings.

**Quick**

Easy-to-use, PowerNavigator software

- Drag and drop system design
- Click and drag sequencing
- Command tool library
- Pre-loaded common configuration for power FPGAs

**Flexible**

PMBus monitoring and configurability

- Works with other PMBus devices with common protocol

**Simple**

- Built-in auto-compensation provides optimal dynamic performance to minimize the output voltage variation during transient events
- Adjustable output voltage via PMBus command simplifies the design and saves cost by reducing the number of module types
- Simplified voltage tracking via PMBus
- Thermally enhanced HDA package (ZL9006M, ZL9010M) allows low cost automated assembly using standard surface mount equipment

**ZL9117M: Fully encapsulated 17A digital module delivers 4X battery power density and improves system reliability.**

- ~5% efficiency improvement vs. previous modules
- Optimized for <2.5$V_{OUT}$ operation
- Input voltage range: 4.5V to 13.2V
- Adjustable 0.6V to 3.6V output range
- Minimal external components
- Excellent output regulation
- ±1% over industrial temperature range
- Programmable switching frequency from 600kHz to 1.2MHz (preset to ~600kHz)
- Frequency sync and power good, internal soft-start

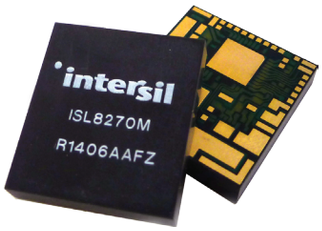


**ISL8270M/7M: New 24A and 33A digital power modules using Intersil's ChargeMode™ digital control loop architecture simplifies design.**

Design can be completed using only bulk input and output capacitors. Patented thermally enhanced HDA package enables continuous 25A (ISL8270M) and 33A (ISL8271M) continuous output current can be delivered without the need for air flow or heatsink.

- Complete digital switch mode power supply
- 4.5V to 14V wide input voltage range
- Programmable output voltage from 0.6V to 3.6V
- PMBus compliant I²C interface
- Programmable $V_{OUT}$, margining, UV/OV, $I_{OUT}$ limit, soft-start/stop, sequencing, and external synchronization
- Monitor: $V_{IN}$, $V_{OUT}$, $I_{OUT}$, temperature, duty cycle, switching frequency and faults
- ±1.0% $V_{OUT}$ accuracy over line, load and temperature

**See complete Digital Power Module selection table on page 22.**

## DID YOU KNOW?

In 2011, Intersil released the industry's first fully-encapsulated Digital Power Module.

## START USING POWERNAVIGATOR

Intersil's digital power configuration software can also be used for Digital Power Modules. Get your free software today at **intersil.com/powernavigator**

Download User's Guide

Read App Notes

Watch Videos

Watch video demonstration ZL9117M and ZL8101 at **go.intersil.com/PowerModules**

# POWER MANAGEMENT SELECTION TABLES

# ISOLATED POWER

## POWER FACTOR CONTROLLERS

| Device | Device Description | Switching Frequency | Skip Mode | Control Mode | UVLO Rising | UVLO Falling | $V_{BIAS}$ (max) | No-Load Operating Current | # of PWM Outputs | FET Driver $I_{OUT}$ (max) | Max Duty Cycle (%) | Package |
|---|---|---|---|---|---|---|---|---|---|---|---|---|
| ISL6730A | Power Factor Correction Controller with skip mode | 124kHz | Yes-Fixed | Peak Current Mode | 9.65 V | 7.25 V | 20 V | 3.3 mA | 1 | 2.8 A | 98.5 | 10 Ld MSOP |
| ISL6731A | Power Factor Correction Controller | 124kHz | Yes-Fixed | Peak Current Mode | 9.65 V | 7.25 V | 20 V | 3.3 mA | 1 | 2.8 A | 98.5 | 14 Ld SOIC |
| ISL6730B | Power Factor Correction Controller | 62kHz | Yes-Fixed | Peak Current Mode | 9.65 V | 7.25 V | 20 V | 3.3 mA | 1 | 2.8 A | 98.5 | 10 Ld MSOP |
| ISL6731B | | | | | | | | | | | | 14 Ld SOIC |
| ISL6730C | Power Factor Correction Controller | 124kHz | No | Peak Current Mode | 9.65 V | 7.25 V | 20 V | 3.3 mA | 1 | 2.8 A | 98.5 | 10 Ld MSOP |
| ISL6730D | Power Factor Correction Controller | 62kHz | No | Peak Current Mode | 9.65 V | 7.25 V | 20 V | 3.3 mA | 1 | 2.8 A | 98.5 | 10 Ld MSOP |

## ISOLATED PWM CONTROLLERS

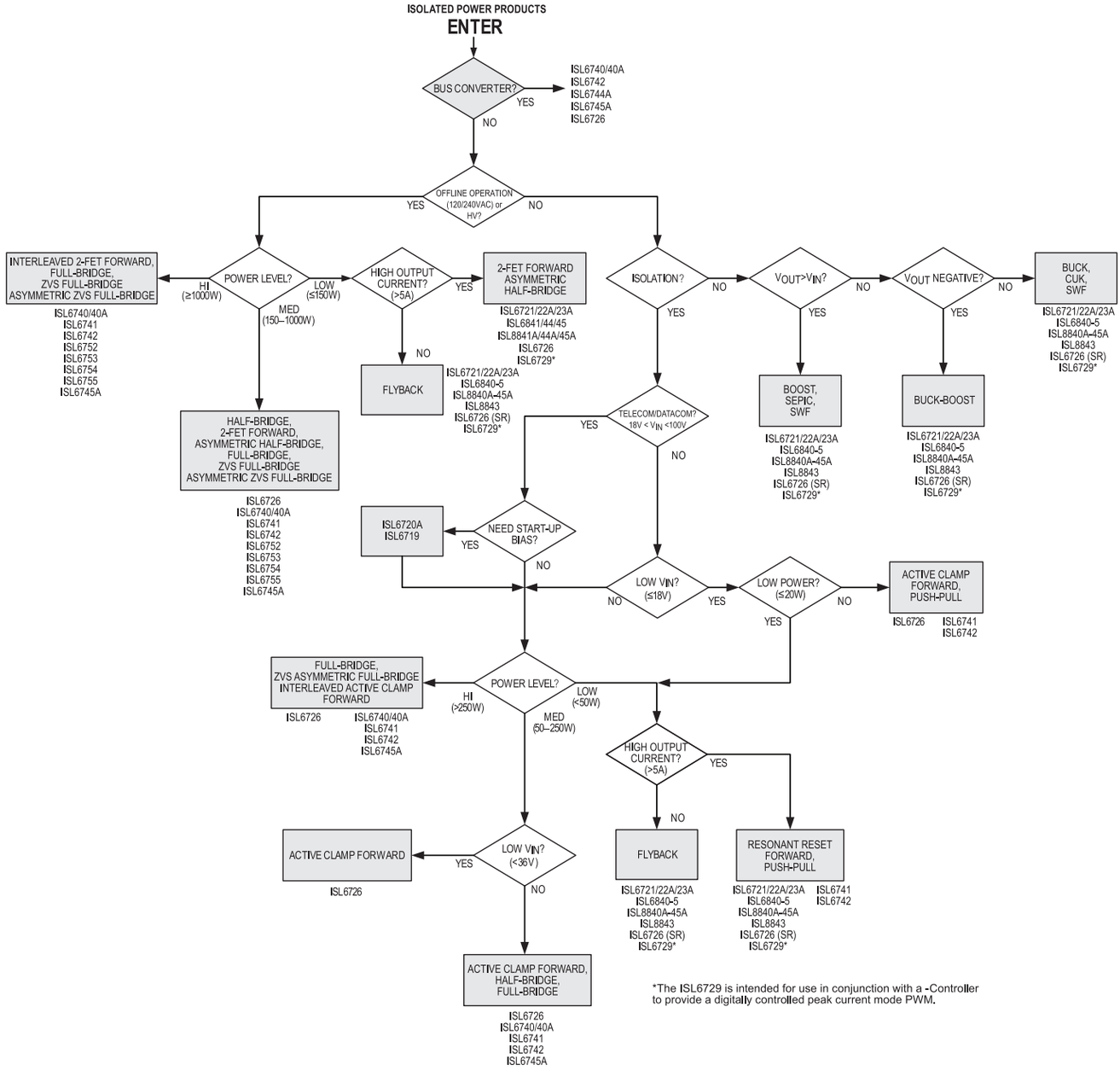

## ISOLATED PWM CONTROLLERS (CONTINUED)

| Device | Device Description | Control Mode | UVLO Rising | UVLO Falling | $V_{BIAS}$ (max) | No-Load Operating Current | # of PWM Outputs | FET Driver $I_{OUT}$ (max) | Max Duty Cycle (%) | Package |
|---|---|---|---|---|---|---|---|---|---|---|
| Full-Bridge ZVS (Zero-Voltage-Switching) | | | | | | | | | | |
| ISL6551 | ZVS Full Bridge PWM Controller | Peak Current Mode | 9.6 V | 8.6 V | 16 V | 13 mA | 6 | 2 A | 100 | 28 Ld QFN, 28 Ld SOIC |
| ISL6726 | Active Clamp Forward PWM Controller | Active clamp forward, Asymmetric half-bridge, Interleaved active clamp forward | 7.65 V | 6.23 V | 20 V | 10 mA | 1 | 1 A | 100 | 20 Ld QSOP |
| ISL6752 | ZVS Full-Bridge Current-Mode PWM with Adjustable Synchronous Rectifier Control | Peak Current Mode | 8.75 V | 7 V | 20 V | 6 mA | 6 | 0.1 A | 100 | 16 Ld QSOP |
| ISL6753 | ZVS Full-Bridge PWM Controller | Peak Current Mode or Voltage Mode | 8.75 V | 7 V | 20 V | 5 mA | 4 | 0.1 A | 100 | 16 Ld QSOP |
| ISL6754 | ZVS Full-Bridge PWM Controller with Adjustable Synchronous Rectifier Control | Peak Current Mode or Voltage Mode | 8.75 V | 7 V | 20 V | 11 mA | 6 | 0.1 A | 100 | 20 Ld QSOP |
| ISL6755 | ZVS Full-Bridge PWM Controller with Average Current Limit | Peak Current Mode or Voltage Mode | 8.75 V | 7 V | 20 V | 11 mA | 4 | 0.1 A | 100 | 20 Ld QSOP |
| ISL78223 | ZVS Full-Bridge PWM Controller with Adjustable Synchronous Rectifier Control | Peak Current Mode | 8.75 V | 7.0 V | 20 V | 12 mA | 1 | 0.01 A | 99 | 20 Ld QSOP |
| Double Ended (Half-Bridge, Full-Bridge , Push–Pull) | | | | | | | | | | |
| ISL6740/A | Flexible Double Ended Voltage and Current Mode PWM Controllers | Voltage Mode | 7.25 V | 6.75 V | 20 V | 5 mA | 2 | 0.5 A | 100 | 16 Ld SOIC, 16 Ld TSSOP |
| ISL6741 | Flexible Double Ended Voltage and Current Mode PWM Controllers | Peak Current Mode | 7.25 V | 6.75 V | 20 V | 5 mA | 2 | 0.5 A | 100 | 16 Ld SOIC, 16 Ld TSSOP |
| ISL6742B | Advanced Double-Ended PWM Controller | Voltage, Peak Current, or Average Current Mode | 8.75 V | 7 V | 20 V | 5 mA | 4 | 0.1 A | 100 | 16 Ld QSOP |
| ISL6744A | Intermediate Bus PWM Controller | Voltage Mode | 6.2 V | 5.7 V | 20 V | 3 mA | 2 | 1 A | 100 | 8 Ld MSOP, 8 Ld SOIC |
| ISL6745/A | Voltage-Mode Double-Ended PWM Controller with Precision Dead-Time Adjustment | Voltage Mode | 6.3 V | 5.7 V | 20 V | 3 mA | 2 | 1 A | 100 | 10 Ld MSOP |
| Single–Ended (Flyback, Forward, ACF) | | | | | | | | | | |
| ISL1903 | Dimmable Buck LED Driver - AC Mains or DC Input LED Driver | Critical Conduction Mode (CrCM) | 8.55 | 7.1 | 26 V | 6 mA | 1 | 1 A | 100 | 16 Ld QSOP |
| ISL1904 | Dimmable AC Mains LED Driver with PFC and Primary Side Regulation | Critical Conduction Mode (CrCM) | 8.55 | 7.1 | 26 V | 6 mA | 1 | 1 A | 100 | 16 Ld QSOP |
| ISL6401 | Synchronizing Current Mode PWM for Subscriber Line Interface Circuits (SLICs) | Peak Current Mode | 4.1 V | 3.6 V | 7 V | 3.7 mA | 1 | 1 A | 50 | 14 Ld SOIC, 16 Ld QFN |
| ISL6721 | Flexible Single Ended Current Mode PWM Controller | Peak Current Mode | 8.25 V | 7.7 V | 20 V | 4.5 mA | 1 | 1 A | 100 | 16 Ld SOIC, 16 Ld TSSOP |
| ISL6721A | Flexible Single-Ended Current Mode PWM Controller | Peak Current Mode | 6.8 V | 6.2 V | 20 V | 4.5 mA | 1 | 1 A | 100 | 16 Ld SOIC, 16 Ld TSSOP |
| ISL6722A | Flexible Single Ended Current Mode PWM Controllers | Peak Current Mode | 8.25 V | 7.7 V | 20 V | 4.5 mA | 1 | 1 A | 100 | 16 Ld QFN, 16 Ld SOIC, 16 Ld TSSOP |
| ISL6723A | Flexible Single Ended Current Mode PWM Controllers | Peak Current Mode | 13 V | 7.7 V | 20 V | 4.5 mA | 1 | 1 A | 100 | 16 Ld SOIC |
| ISL6726 | Active Clamp Forward PWM Controller | Active clamp forward, Asymmetric half-bridge, Interleaved active clamp forward | 7.65 V | 6.23 V | 20 V | 10 mA | 1 | 1 A | 100 | 20 Ld QSOP |
| ISL6729 | Low-Cost Single-Ended Current-Mode PWM for Microcontroller-Based Power Converters | Peak Current Mode | 4.5 V | 4.3 V | 7 V | 3.3 mA | 1 | 1 A | 100 | 8 Ld SOIC, 8 Ld MSOP |
| ISL6730 | Power Factor Correction Controller | Peak Current Mode | 9.65 V | 7.25 V | 20 V | 3.3 mA | | 2.8 A | 98.5 | 10 Ld MSOP |
| ISL6840 | Improved Industry-Standard Single-Ended PWM Controller | Peak Current Mode | 7 V | 6.6 V | 20 V | 2.3 mA | 1 | 1 A | 100 | 8 Ld DFN, 8 Ld MSOP, 8 Ld SOIC |
| ISL6841 | Improved Industry-Standard Single-Ended PWM Controller | Peak Current Mode | 7 V | 6.6 V | 20 V | 2.3 mA | 1 | 1 A | 50 | 8 Ld DFN, 8 Ld MSOP, 8 Ld SOIC |
| ISL6842 | Improved Industry-Standard Single-Ended PWM Controller | Peak Current Mode | 14.4 V | 8.8 V | 20 V | 2.3 mA | 1 | 1 A | 100 | 8 Ld DFN, 8 Ld MSOP, 8 Ld SOIC |
| ISL6843 | Improved Industry-Standard Single-Ended PWM Controller | Peak Current Mode | 8.4 V | 7.6 V | 20 V | 2.3 mA | 1 | 1 A | 100 | 8 Ld DFN, 8 Ld MSOP, 8 Ld SOIC |
| ISL6844 | Improved Industry-Standard Single-Ended PWM Controller | Peak Current Mode | 14.4 V | 8.8 V | 20 V | 2.3 mA | 1 | 1 A | 50 | 8 Ld DFN, 8 Ld MSOP, 8 Ld SOIC |
| ISL6845 | Improved Industry-Standard Single-Ended PWM Controller | Peak Current Mode | 8.4 V | 7.6 V | 20 V | 2.3 mA | 1 | 1 A | 50 | 8 Ld DFN, 8 Ld MSOP, 8 Ld SOIC |
| ISL78215 | Improved Industry Standard Single-Ended Current Mode PWM Controller | Peak Current Mode | 7 V | 6.6 V | 20 V | 3.3 mA | 1 | 1 A | 48 | 8 Ld MSOP |
| ISL8840A | High Performance Industry Standard Single-Ended Current Mode PWM Controller | Peak Current Mode | 7 V | 6.6 V | 30 V | 2.9 mA | 1 | 1 A | 100 | 8 Ld MSOP, 8 Ld SOIC |
| ISL8841A | High Performance Industry Standard Single-Ended Current Mode PWM Controller | Peak Current Mode | 7 V | 6.6 V | 30 V | 2.9 mA | 1 | 1 A | 50 | 8 Ld MSOP, 8 Ld SOIC |
| ISL8842A | High Performance Industry Standard Single-Ended Current Mode PWM Controller | Peak Current Mode | 14.4 V | 8.8 V | 30 V | 2.9 mA | 1 | 1 A | 100 | 8 Ld MSOP, 8 Ld SOIC |
| ISL8843 | High Performance Industry Standard Single-Ended Current Mode PWM Controller | Peak Current Mode | 8.4 V | 7.6 V | 30 V | 2.9 mA | 1 | 1 A | 100 | 8 Ld MSOP, 8 Ld SOIC |
| ISL8843A | Single-Ended Current Mode PWM Controller with 3% Current Limit and Military Temp Grade Option | Peak Current Mode | 8.4 V | 7.6 V | 30 V | 2.9 mA | 1 | 1 A | 100 | 8 Ld MSOP, 8 Ld SOIC |
| ISL8844A | High Performance Industry Standard Single-Ended Current Mode PWM Controller | Peak Current Mode | 14.4 V | 8.8 V | 30 V | 2.9 mA | 1 | 1 A | 50 | 8 Ld MSOP, 8 Ld SOIC |
| ISL8845A | High Performance Industry Standard Single-Ended Current Mode PWM Controller | Peak Current Mode | 8.4 V | 7.6 V | 30 V | 2.9 mA | 1 | 1 A | 50 | 8 Ld MSOP, 8 Ld SOIC |

# FET DRIVERS

## HALF-BRIDGE

| Device | Device Description | Max Bootstrap Supply Voltage (V) | Max Bias Voltage (V) | Peak Pull-up Current (A) | Peak Pull-down Current (A) | Turn-On Prop Delay (ns) | Turn-Off Prop Delay (ns) | Rise Time (ns) | Fall Time (ns) | Package |
|---|---|---|---|---|---|---|---|---|---|---|
| HIP2100 | 100V/2A Peak Low Cost High-Frequency Half bridge Driver with CMOS Logic Inputs | 114 | 14 | 2 | 2 | 20 | 20 | 10 | 10 | 8 Ld EPSOIC, 8 Ld SOIC, 12 Ld DFN, 16 Ld QFN |
| HIP2101 | 100V/2A Peak Low Cost High-Frequency Half bridge Driver with TTL/CMOS Logic Inputs | 114 | 14 | 2 | 2 | 25 | 25 | 10 | 10 | 8 Ld EPSOIC, 8 Ld SOIC, 12 Ld DFN, 16 Ld QFN |
| ISL2100A | 100V, 2A Peak, High Frequency Half bridge Drivers | 114 | 14 | 2 | 2 | 39 | 31 | 10 | 10 | 9 Ld DFN |
| ISL2101A | 100V, 2A Peak, High Frequency Half bridge Drivers | 114 | 14 | 2 | 2 | 39 | 34 | 10 | 10 | 9 Ld DFN |
| ISL2110 | 100V, 3A/4A Peak, High Frequency Half bridge Drivers (CMOS compatible inputs thresholds) | 114 | 14 | 3 | 4 | 38 | 32 | 9 | 7.5 | 12 Ld DFN, 8 Ld SOIC |
| ISL2111 | 100V, 3A/4A Peak, High Frequency Half bridge Drivers (TTL compatible inputs thresholds) | 114 | 14 | 3 | 4 | 38 | 32 | 9 | 7.5 | 10 Ld TDFN, 12 Ld DFN, 8 Ld SOIC |
| ISL6700 | 80V/1.25A Peak, Medium Frequency, Low Cost, Half bridge Driver | 96 | 15 | 1.4 | 1.3 | 70 | 60 | 5 | 5 | 12 Ld QFN, 8 Ld SOIC |
| ISL89400, ISL89401 | 100V, 1.25A Peak, High Frequency Half bridge Driver | 114 | 14 | 1.25 | 1.25 | 39 | 31 | 16 | 16 | 8 Ld SOIC, 9 Ld DFN |
| HIP2120 | 100V, 1.25A Peak, High Frequency Half bridge Driver with PWM and Enable Inputs (CMOS inputs) | 114 | 14 | 2 | 2 | 50 | 32 | 10 | 10 | 9 Ld DFN, 10 Ld DFN |
| HIP2121, HIP2123 | 100V, 2A Peak, High Frequency Half bridge Driver with PWM and Enable Inputs (Logic/TTL inputs) | 114 | 14 | 2 | 2 | 50 | 32 | 10 | 10 | 9 Ld DFN, 10 Ld DFN |
| HIP2122, HIP2124 | 100V, 2A Peak, High Frequency Half bridge Driver with Independent High and Low Inputs (CMOS inputs) | 114 | 14 | 2 | 2 | 50 | 32 | 10 | 10 | 9 Ld DFN, 10 Ld DFN |

## FULL-BRIDGE

| Device | Device Description | Max Bootstrap Supply Voltage (V) | Max Bias Voltage (V) | Peak Pull-up Current (A) | Peak Pull-down Current (A) | Turn-On Prop Delay (ns) | Turn-Off Prop Delay (ns) | Rise Time (ns) | Fall Time (ns) | Package |
|---|---|---|---|---|---|---|---|---|---|---|
| HIP4080A | 80V/2.5A Peak, High Frequency Full Bridge FET Driver with Charge Pump and Input Comparators | 95 | 15 | 2.6 | 2.4 | 70 | 50 | 10 | 10 | 20 Ld PDIP, 20 Ld SOIC |
| HIP4081A | 80V/2.5A Peak, High Frequency Full Bridge FET Driver with Charge Pump and Independent Control Inputs | 95 | 15 | 2.6 | 2.4 | 60 | 35 | 10 | 10 | 20 Ld PDIP, 20 Ld SOIC |
| HIP4082 | 80V/1.25A Peak Current Full Bridge FET Driver | 95 | 15 | 1.4 | 1.3 | 75 | 55 | 9 | 9 | 16 Ld PDIP, 16 Ld SOIC |
| ISL83202 | 55V, 1A Peak Current H-Bridge FET Driver | 70 | 15 | 1 | 1 | 75 | 55 | 9 | 9 | 16 Ld PDIP, 16 Ld SOIC |
| ISL83204A | 60V/2.5A Peak, High Frequency Full Bridge FET Driver | 75 | 15 | 2.6 | 2.4 | 70 | 50 | 10 | 10 | 20 Ld PDIP, 20 Ld SOIC |

## 3-PHASE

| Device | Device Description | Max Bootstrap Supply Voltage (V) | Max Bias Voltage (V) | Peak Pull-up Current (A) | Peak Pull-down Current (A) | Turn-On Prop Delay (ns) | Turn-Off Prop Delay (ns) | Rise Time (ns) | Fall Time (ns) | Package |
|---|---|---|---|---|---|---|---|---|---|---|
| HIP4083 | 80V/0.3A Peak Three Phase High Side Driver | 95 | 15 | 0.24 (avg) | 0.3 (avg) | 65 | 60 | 35 | 30 | 16 Ld PDIP, 16 Ld SOIC |
| HIP4086 | 80V/0.5A Peak Three Phase Driver with Integrated Charge Pump | 95 | 15 | 0.5 | 1.1 | 65 | 75 | 20 | 10 | 24 Ld PDIP, 24 Ld SOIC |
| HIP4086A | 80V/0.5A Peak Three Phase Driver | 95 | 15 | 0.5 | 1.1 | 65 | 75 | 20 | 10 | 24 Ld SOIC |

## INTEGRATED FET BRIDGE AND HIGH SIDE DRIVERS

| Device | Device Description | Max Bootstrap Supply Voltage (V) | Max Bias Voltage (V) | Sourcing Current Capability (A) | Sinking Current Capability (A) | Turn-On Prop Delay (µs) | Turn-Off Prop Delay (µs) | Rise Time (µs) | Fall Time (µs) | Package |
|---|---|---|---|---|---|---|---|---|---|---|
| HIP4020 | Full Bridge Driver with Integrated 0.5A Power FETs for Small 3V, 5V and 12V DC Motors | N/A | 15 | 0.5 | 0.5 | 2.5 | 0.1 | 4 | 0.1 | 20 Ld SOIC |
| ISL6801 | High Voltage Bootstrap High Side Driver | 120 | 6.5 | 0.2 | 0.2 | 1 | 1 | 0.1 | 0.1 | 8 Ld SOIC |

## FET DRIVERS (CONTINUED)

### LOW-SIDE FET DRIVERS

| Device | Device Description | # of Drivers | Input Supply Range (V) | Input Signal Range (V) | Output Signal Range (V) | $I_S$ (mA) | Max Operating Frequency (MHz) | Peak Output $I_{PK}$ (A) | Rise Time (ns) | Fall Time (ns) | $V_{BIAS}$ (min) (V) | $R_{ON}$ (Ω) | Package |
|---|---|---|---|---|---|---|---|---|---|---|---|---|---|
| ISL89160, ISL89161, ISL89162, ISL89163, ISL89164, ISL89165, ISL89166, ISL89167, ISL89168 | High Speed, Dual Channel, 6A, 4.5 to 16$V_{OUT}$, Power MOSFET Driver | 2 | +4.5 to +16 | 0 to $V_P$ | 0 to +16 | 5 | 10 | 6 | 20 | 20 | 4.5 | 2 | 8 Ld EPSOIC, 8 Ld TDFN |
| ISL89367 | High Speed, Dual Channel, 6A, MOSFET Driver With Programmable Rising and Falling Edge Delay Timers | 2 | +4.5 to +16 | 0 to $V_P$ | 0 to +16 | 5 | 10 | 6 | 20 | 20 | 4.5 | 2 | 16 Ld TDFN |
| ISL89410 | High Speed, Dual Channel Power MOSFET Drivers | 2 | +4.5 to +18 | 0 to $V_P$ | 0 to +18 | 4.5 | 10 | 2 | 10 | 13 | 4.5 | 4 | 8 Ld PDIP, 8 Ld SOIC |
| ISL89411 | High Speed, Dual Channel Power MOSFET Drivers | 2 | +4.5 to +18 | 0 to $V_P$ | 0 to +18 | 1 | 10 | 2 | 10 | 13 | 4.5 | * | 8 Ld PDIP, 8 Ld SOIC |
| ISL89412 | High Speed, Dual Channel Power MOSFET Drivers | 2 | +4.5 to +18 | 0 to $V_P$ | 0 to +18 | 2.5 | 10 | 2 | 10 | 13 | 4.5 | * | 8 Ld PDIP, 8 Ld SOIC |

### SYNCHRONOUS DRIVERS FOR MULTIPHASE PWM

| Device | Device Description | $V_{IN}$/Vpwm (max) (V) | $I_S$ | $V_{DRIVE}$ (V) | Output Per Driver $I_{UGATE}$ Source/Sink (A) | Output Per Driver $I_{LGATE}$ Source/Sink (A) | Phase $V_{PHASE}$ (min) (V) | Phase $V_{PHASE}$ (max) (V) | No Load $I_S$ (max) (mA) | Package |
|---|---|---|---|---|---|---|---|---|---|---|
| ISL6208/B | High Voltage Synchronous Rectified Buck MOSFET Driver with Programmable Deadtime | -0.3V to VCC + 0.3V | 80µA | 5 | 2/2 | 2/4 | VBOOT-7 | 30 | Almost negligible | 8 Ld QFN, 8 Ld SOIC |
| ISL6209 | High Voltage Synchronous Rectified Buck MOSFET Driver with Programmable Deadtime | -0.3V to VCC + 0.3V | 85µA | 5 | 2/2 | 2/4 | VBOOT-7 | 30 | Almost negligible | 8 Ld QFN, 8 Ld SOIC |
| ISL6210 | Dual Synchronous Rectified MOSFET Drivers | 25 | 170µA | 5 | 2 | 2/4 | VBOOT-7 | 25 | Almost negligible | 16 Ld QFN |
| ISL6608 | Synchronous Rectified MOSFET Driver | -0.3V to 7V | 80µA | 5 | 2/2 | 2/4 | VBOOT-7 | 22 | Almost negligible | 8 Ld QFN, 8 Ld SOIC |
| ISL6609/A | Synchronous Rectified MOSFET Driver | -0.3V to VCC + 0.3V | 132µA | 5 | 2/2 | 2/4 | -8V (<20ns) | 15VDC, 30V (<100ns) | Almost negligible | 8 Ld QFN, 8 Ld SOIC |
| ISL6610/A | Dual Synchronous Rectified MOSFET Drivers | 22 | 240µA (typ) | 5 | 2/2 | 2/4 | -8 | 30 | 1.6 (typ) | 14 Ld SOIC, 16 Ld QFN |
| ISL6611A | Phase Doubler with Integrated Drivers and Phase Shedding Function | -0.3V to VCC + 0.3V | 2.5mA | 5 | 2/2 | 2/4 | -8V (<20ns) | 27VDC, 30V (<100ns) | 1.25 | 16 Ld QFN |
| ISL6620/A | VR11.1 Compatible Synchronous Rectified Buck MOSFET Drivers | 15 | 1.85mA (typ) | 5 | 2/2 | 2/4 | GND - 0.3VDC GND - 8V (<100ns) | 15VDC, 30V (<100ns) | 1.27 (typ) | 8 Ld SOIC, 10 Ld DFN |
| ISL6625A | Synchronous Rectified Buck MOSFET Drivers | 15 | 7.56mA | 5 to 12 | 1.25/2 | 1.75/3 | GND - 0.3VDC GND - 8V (400ns) | 25VDC, 30V (200ns) | N/A | 8 Ld DFN |

### VARIABLE DRIVE MOSFET DRIVERS

| Device | Device Description | $V_{IN}/V_{PWM}$ (max) (V) | $I_S$ (mA) | $V_{DRIVE}$ (V) | Output Per Driver $I_{UGATE}$ Source/Sink (A) | Output Per Driver $I_{LGATE}$ Source/Sink (A) | Phase $V_{PHASE}$ (min) (V) | Phase $V_{PHASE}$ (max) (V) | No Load $I_S$ (max) (mA) | Package |
|---|---|---|---|---|---|---|---|---|---|---|
| ISL6612A/B | Advanced Synchronous Rectified Buck MOSFET Drivers with Pre-POR OVP | GND - 0.3V to 7V | 7.2 | 5 to 12 | 1.25/2 | 2/3 | GND - 0.3VDC GND - 8V (<400ns) | 15VDC, 30V (<200ns) | 4.5 | 8 Ld EPSOIC, 8 Ld SOIC, 10 Ld DFN |
| ISL6614/A/B | Dual Advanced Synchronous Rectified Buck MOSFET Drivers with Protection Features | GND - 0.3V to 7V | 7.1 | 5 to 12 | 1.25/2 | 2/3 | GND - 0.3VDC GND - 8V (<400ns) | 15VDC, 30V (<200ns) | 4.5 | 14 Ld SOIC, 16 Ld QFN |
| ISL6622, ISL6622A | VR11.1 Compatible Synchronous Rectified Buck MOSFET Drivers | 15 | 5.7 | 5 to 12 | 1.25/2 | 2/3 | GND - 0.3VDC GND - 8V (<200ns) | 15VDC, 30V (<200ns) | N/A | 8 Ld SOIC, 10 Ld DFN |
| ISL6615, ISL6615A | High-Frequency 6A Sink Synchronous MOSFET Drivers with Protection Features | 15 | 8 | 4.5 to 13.2 | 2.5/4 | 4/6 | GND - 0.3VDC GND - 8V (<400ns) | 15VDC, 30V (<200ns) | 4.5 | 8 Ld SOIC, 10 Ld DFN |

# NON-ISOLATED POWER

## DIGITAL POWER

### DIGITAL PWM CONTROLLERS

| Device | Device Description | $V_{IN}$ (min) (V) | $V_{IN}$ (max) (V) | $V_{OUT}$ (min) (V) | $V_{OUT}$ (max) (V) | $I_{OUT}$ (max) (A) | $I_Q$ (mA) | Switching Frequency (MHz) | Peak Efficiency (%) | Integrated FET Drivers | Integrated Power Management | Package |
|---|---|---|---|---|---|---|---|---|---|---|---|---|
| ZL6105 | Adaptive Digital DC/DC Controller with Drivers and Auto Compensation and Current Sharing | 3 | 14 | 0.54 | 5.5 | >40 | 16 | 0.2 to 1.4 | 96 | Y | Y | 36 Ld QFN |
| ZL8101 | Adaptive Digital DC/DC Controller with Auto Compensation and Current Sharing | 4.5 | 14 | 0.54 | 4 | >40 | 16 | 0.2 to 1.4 | 96 | N | Y | 32 Ld QFN |
| ZL8800 | Dual Channel/Dual Phase PMBus™ ChargeMode Control DC/DC Digital Controller | 4.5 | 14 | 0.54 | 5.5 | >40 | 16 | 0.2 to 1.33 | 96 | N | Y | 44 Ld QFN |

### POWER MOSFET DRIVERS

| Device | Device Description | $V_{IN}/V_{PWM}$ (max) (V) | $V_{DRIVE}$ (V) | Output Per Driver $I_{UGATE}$ Source/Sink (A) | Output Per Driver $I_{LGATE}$ Source/Sink (A) | No Load $I_S$ (max) (mA) | Package |
|---|---|---|---|---|---|---|---|
| ZL1505 | Synchronous Step-Down MOSFET Drivers | 5 | 7.5 | 4/5 | 3/3 | 0.8 | 10 Ld DFN |

### DIGITAL INTEGRATED FET REGULATOR

| Device | Device Description | $V_{IN}$ (min) (V) | $V_{IN}$ (max) (V) | $V_{OUT}$ (min) (V) | $V_{OUT}$ (max) (V) | $I_{OUT}$ (max) (A) | $I_Q$ (mA) | Switching Frequency (MHz) | Peak Efficiency (%) | Integrated MOSFET | Integrated Power Management | Package |
|---|---|---|---|---|---|---|---|---|---|---|---|---|
| ZL2102 | 6A Digital Synchronous Step-Down DC/DC Converter with Auto Compensation | 4.5 | 14 | 0.54 | 5.5 | 6 | 15 | 0.2 to 1.0 | 90 | Y | Y | 36 Ld QFN |
| ZL2106 | 6A Digital-DC Synchronous Step-Down DC/DC Converter | 4.5 | 14 | 0.54 | 5.5 | 6 | 11 | 0.2 to 1.0 | 87 | Y | Y | 36 Ld QFN |

## POWER MODULES

### ANALOG POWER MODULES

| Device | Device Description | $V_{IN}$ Range (V) | $V_{OUT}$ Range (V) | $I_{OUT}$ (A) | Current Share | Multi-phase | $P_{GOOD}$ | Enable | Ambient Temp Range (°C) | Load Fault Protection | Peak Efficiency (%) | Package (mm) |
|---|---|---|---|---|---|---|---|---|---|---|---|---|
| Up to 20V | | | | | | | | | | | | |
| ISL8204M* | High Efficiency DC/DC Power Module | 1 - 20** | 0.6 - 6 | 4 | No | No | No | Yes | -40 to +85 | Yes | 95 | 15 Ld QFN (15 x 15 x 3.5) |
| ISL8206M* | Complete High Efficiency DC/DC Power Module | 1 - 20** | 0.6 - 6 | 6 | No | No | No | Yes | -40 to +85 | Yes | 95 | 15 Ld QFN (15 x 15 x 3.5) |
| ISL8201M | 10A, High Efficiency DC/DC Module | 1 - 20** | 0.6 - 5 | 10 | No | No | No | Yes | -40 to +85 | Yes | 95 | 15 Ld QFN (15 x 15 x 3.5) |
| ISL8200AM | Complete Current Share 10A DC/DC Power Module | 4.5 - 20 | 0.6 - 6 | 10 | Yes | Yes | Yes | Yes | -40 to +85 | Yes | 93 | 23 Ld QFN (15 x 15 x 2.2) |
| | | | | | Up to 6 phase single output with current balancing and sharing | | | | | | | |
| ISL8225M | Dual 15A/15A High Efficiency Power Module | 4.5 - 20 | 0.6 - 6 | Dual 15A or single 30A | Yes | Yes | Yes | Yes | -40 to +85 | Yes | 94 | 26 Ld QFN (17 x 17 x 7.5) |
| | | | | | Up to 12 phase single output with current balancing and sharing | | | | | | | |
| Up to 80V | | | | | | | | | | | | |
| ISL8216M | Complete High Voltage 80V, 4A DC/DC Power Module | 10 - 80 | 2.5 - 30 | 4 | No | No | Yes | Yes | -40 to +85 | Yes | 96 | 22 Ld HDA (15 x 15 x 3.6) |

*Pin to pin compatible to the ISL8201M
** $P_{VCC}$: 4.5V to 14.4V

### DIGITAL POWER MODULES

| Device | Device Description | $V_{IN}$ Range (V) | $V_{OUT}$ Range (V) | $I_{OUT}$ (A) | Current Share | Multi-phase | $P_{GOOD}$ | Enable | Ambient Temp Range (°C) | Load Fault Protection | Peak Efficiency (%) | Package (mm) |
|---|---|---|---|---|---|---|---|---|---|---|---|---|
| ZL9006M | Digital DC/DC PMBus 6A Power Module | 4.5 - 13.2 | 0.6 - 3.6 | 6 | Yes | Yes | Yes | Yes | -40 to +85 | Yes | 95 | 32 Ld HDA MODULE ( 17.2 x 11.45 x 2.5) |
| ZL9010M | Digital DC/DC PMBus 10A Power Module | 4.5 - 13.2 | 0.6 - 3.6 | 10 | Yes | Yes | Yes | Yes | -40 to +85 | Yes | 95 | 32 Ld HDA MODULE ( 17.2 x 11.45 x 2.5) |
| ZL9101M | Digital DC/DC PMBus 12A Module | 4.5 - 13.2 | 0.54 - 3.6 | 12 | Yes | Yes | Yes | Yes | -40 to +85 | Yes | 95 | 21 Ld QFN (15 x 15 x 3.5) |
| ZL9117M** | Digital DC/DC PMBus 17A Module | 4.5 - 13.2 | 0.54 - 3.6 | 17 | Yes | Yes | Yes | Yes | -40 to +85 | Yes | 95 | 21 Ld QFN (15 x 15 x 3.5) |
| ISL8270M | Digital DC/DC PMBus 25A Module | 4.5 - 14 | 0.54 - 5.5 | 25 | Yes | Yes | Yes | Yes | -40 to +85 | Yes | 96 | 40 Ld HDA MODULE (17 x 19 x 3.55) |
| ISL8271M | Digital DC/DC PMBus 33A Module | 4.5 - 14 | 0.54 - 5.5 | 33 | Yes | Yes | Yes | Yes | -40 to +85 | Yes | 96 | 40 Ld HDA MODULE (17 x 19 x 3.55) |

**Pin to pin compatible to the ZL9101M

# NON-ISOLATED PWM CONTROLLERS

## SINGLE OUTPUT BUCK CONTROLLERS

| Device | Device Descriptions | $V_{IN}$ (min) (V) | $V_{IN}$ (max) (V) | $V_{OUT}$ (min) (V) | $V_{OUT}$ (max) (V) | $I_{OUT}$ (max) (A) | $V_{BIAS}$ (min) | $V_{BIAS}$ (max) | $I_S$ (min) | $I_S$ (typ) | Package |
|---|---|---|---|---|---|---|---|---|---|---|---|
| 3.3V or 5V Input | | | | | | | | | | | |
| ISL6406 | Single Synchronous Buck Pulse-Width Modulation (PWM) Controller | 3.3 | 5 | 0.8 | 5 | 20 | 3.3 V | 5 V | 7 mA | 9.8 mA | 16 Ld QFN, 16 Ld SOIC, 16 Ld TSSOP |
| ISL6439/A | Single Sync Buck PWM Controller for Broadband Gateway Applications | 3.3 | 5 | 0.8 | 3.3 | 20 | 3.3 V | 3.3 V | 6.1 mA | 6.9 mA | 16 Ld QFN, 14 Ld SOIC |
| ISL6520/A/B | Single Synchronous Buck Pulse-Width Modulation (PWM) Controller | 2.5 | 5 | 0.8 | 5 | 20 | 5 V | 5 V | | 3.2 mA | 16 Ld QFN, 8 Ld SOIC |
| ISL6526/A | Single Synchronous Buck Pulse-Width Modulation (PWM) Controller | 2.5 | 5 | 0.8 | $V_{IN}$ | 20 | 3.3 V | 5 V | 6.1 mA | 6.9 mA | 16 Ld QFN, 14 Ld SOIC |
| ISL6527/A | Single Synchronous Buck Pulse-Width Modulation (PWM) Controller | 2.5 | 5 | 0.8 | $V_{IN}$ | 20 | 3.3 V | 5 V | 2.6 mA | 3.3 mA | 16 Ld QFN, 14 Ld SOIC |
| 12V Input | | | | | | | | | | | |
| ISL6341/A/B/C | 5V or 12V Single Synchronous Buck Pulse-Width Modulation (PWM) Controller | 1.5 | 12 | 0.8 | 12 | 30 | 4.5 V | 14.4 V | 6.4 mA | 7 mA | 10 Ld TDFN |
| ISL6522B | Buck and Synchronous Rectifier Pulse-Width Modulator (PWM) Controller | 2.5 | 12 | 0.8 | $V_{IN}$ | 25 | 12 V | 12 V | | 5 mA | 16 Ld QFN, 14 Ld SOIC, 14 Ld TSSOP |
| ISL6525 | Buck and Synchronous-Rectifier Pulse-Width Modulator (PWM) Controller | 2.5 | 12 | 1.2 | $V_{IN}$ | 25 | 12 V | 12 V | | 5 mA | 14 Ld SOIC |
| ISL6535 | Synchronous Buck Pulse-Width Modulator (PWM) Controller | 1.2 | 12 | 0.6 | 5 | 30 | 8 V | 12 V | | 51 mA | 16 Ld QFN, 16 Ld SOIC |
| ISL6545/A | 5V or 12V Single Synchronous Buck Pulse-Width Modulation (PWM) Controller | 1 | 12 | 0.6 | 5 | 25 | 4.5 V | 14.4 V | | 3.2 mA | 10 Ld DFN, 8 Ld SOIC |
| ISL8104 | Synchronous Buck Pulse-Width Modulator (PWM) Controller | 1.2 | 12 | 0.6 | 5 | 30 | 7.6 V | 15.4 V | | 51 mA | 14 Ld SOIC, 16 Ld QFN |
| ISL8105/A/B | +5V or +12V Single-Phase Synchronous Buck Converter PWM Controller with Integrated MOSFET Gate Drivers | 1 | 12 | 0.6 | 5 | 25 | 4.9 V | 14.4 V | | 3.2 mA | 8 Ld SOIC, 10 Ld DFN |
| ISL6420 | Advanced Single Synchronous Buck Pulse-Width Modulation (PWM) Controller | 4.5 | 16 | 0.6 | 15.5 | 20 | 5 V | 5 V | 1.4 mA | 2 mA | 20 Ld QFN, 20 Ld QSOP |
| ISL6540/A | Single-Phase Buck PWM Controller with Integrated High Speed MOSFET Driver and Pre-Biased Load Capability | 3.3 | 20 | 0.6 | $V_{IN}$ | 30 | 2.9 V | 5.5 V | | | 28 Ld QFN |
| ISL8118 | 3.3V to 20V Single-Phase PWM Controller with Integrated 2A/4A MOSFET Drivers | 3.3 | 20 | 0.6 | 20 | 30 | 2.9 V | 5.6 V | | | 28 Ld QFN |
| 24V Input | | | | | | | | | | | |
| ISL6263C/D | 5-Bit VID Single-Phase Voltage Regulator with Current Monitor for GPU Core Power | 5 | 25 | 0.412 | 1.2875 | 25 | 4.75 V | 5.25 V | 1 µA | 2.7 mA | 32 Ld QFN |
| ISL6268 | High-Performance Notebook PWM Controller | 7 | 25 | 0.6 | 3.3 | 25 | 5 V | 5 V | | 1.7 mA | 16 Ld QSOP |
| ISL6269/A/B | High-Performance Notebook PWM Controller with Bias Regulator and Audio-Frequency Clamp | 7 | 25 | 0.6 | 3.3 | 25 | | | 2 mA | | 16 Ld QFN |
| ISL62870 | PWM DC/DC Voltage Regulator Controller | 3.3 | 25 | 0.5 | 3.3 | 30 | 4.75 V | 5.25 V | 1 µA | 1.1 mA | 16 Ld µTQFN |
| ISL62871, ISL62872, ISL62873, ISL62875 | PWM DC/DC Controller With VID Inputs For Portable GPU Core-Voltage Regulator | 3.3 | 25 | 0.5 | 3.3 | 30 | 4.75 V | 5.25 V | 1 µA | 1.1 mA | 16 Ld µTQFN, 20 Ld µTQFN |
| ISL78210 | Automotive PWM DC/DC Voltage Controller | 3.3 | 25 | 0.5 | 3.3 | 30 | 4.75 V | 5.25 V | | 1.1 mA | 16 Ld µTQFN |
| ISL8106 | Wide $V_{IN}$, 7V to 25V, Single-Phase PWM Controller with Integrated MOSFET Drivers | 7 | 25 | 0.6 | 3.3 | 12 | 5 V | 5 V | 2 mA | 2.2 mA | 16 Ld QFN |
| ISL95870/A/B | PWM DC/DC Controller with VID Inputs for Portable GPU Core-Voltage Regulator | 3.3 | 25 | 0.5 | 5 | 30 | 4.75 V | 5.25 V | 1 µA | 1.2 mA | 16 Ld µTQFN |
| ISL95872, ISL95873 | Buck PWM Controller with Internal Compensation and External Reference Tracking | 3.3 | 25 | 0.5 | 3.3 | 30 | 4.75 V | 5.25 V | 1 µA | 1.2 mA | 16 Ld µTQFN |
| ISL95874, ISL95875 | PWM DC/DC Controller with VID Inputs for Portable GPU Core-Voltage Regulator | 3.3 | 25 | 0.5 | 5 | 30 | 4.75 V | 5.25 V | 1 µA | 1.2 mA | 16 Ld µTQFN |
| ISL6420B | Advanced Single Synchronous Buck Pulse-Width Modulation (PWM) Controller | 4.5 | 28 | 0.6 | 27.5 | 20 | 5 V | 5 V | 1.4 mA | 2 mA | 20 Ld QFN, 20 Ld QSOP |
| ISL8130 | Advanced Single Universal Pulse-Width Modulation (PWM) Controller | 4.5 | 28 | 0.6 | 25.2 | 30 | 4.5 V | 28 V | | 2 mA | 20 Ld QFN, 20 Ld QSOP |
| 36V Input | | | | | | | | | | | |
| ISL8115 | High Voltage Synchronous Buck PWM Controller with Integrated Gate Driver and Current Sharing Capability | 2.97 | 36 | 0.6 | 5.5 | 30 | 2.97 V | 5.5 V | - | 10 mA | 24 Ld 4x4 QFN |
| ISL8107 | Single-Phase Pulse-Width Modulation (PWM) Controller with Wide (9V-75V) $V_{IN}$ Range | 9 | 75 | 1.2 | 75 | 10 | 9 V | 75 V | | 2 mA | 16 Ld QFN |

## NON-ISOLATED PWM CONTROLLERS (CONTINUED)

### SINGLE OUTPUT UNIVERSAL CONTROLLERS

| Device | Device Description | Control Mode | UVLO Rising | UVLO Falling | $V_{BIAS}$ (max) | No-Load Operating Current | FET Driver $I_{OUT}$ (max) | Max Duty Cycle (%) | Package |
|---|---|---|---|---|---|---|---|---|---|
| ISL6401 | Synchronizing Current Mode PWM for Subscriber Line Interface Circuits (SLICs) | Peak Current Mode | 4.1 V | 3.6 V | 7 V | 3.7 mA | 1 A | 50 | 16 Ld QFN, 14 Ld SOIC |
| ISL6721 | Flexible Single Ended Current Mode PWM Controller | Peak Current Mode | 8.25 V | 7.7 V | 20 V | 4.5 mA | 1 A | 100 | 14 Ld SOIC, 16 Ld QFN |
| ISL6721A | Flexible Single-ended Current Mode PWM Controller | Peak Current Mode | 6.8 V | 6.2 V | 20 V | 4.5 mA | 1 A | 100 | 16 Ld SOIC, 16 Ld TSSOP |
| ISL6722A | Flexible Single Ended Current Mode PWM Controllers | Peak Current Mode | 8.25 V | 7.7 V | 20 V | 4.5 mA | 1 A | 100 | 16 Ld SOIC, 16 Ld TSSOP |
| ISL6723A | Flexible Single Ended Current Mode PWM Controllers | Peak Current Mode | 13 V | 7.7 V | 20 V | 4.5 mA | 1 A | 100 | 16 Ld QFN, 16 Ld SOIC, 16 Ld TSSOP |
| ISL6726 | Active Clamp Forward PWM Controller | Active clamp forward, Asymmetric half-bridge, Interleaved active clamp forward | 7.65 V | 6.23 V | 20 V | 10 mA | 1 A | 100 | 16 Ld SOIC |
| ISL6729 | Low-Cost Single-Ended Current-Mode PWM for Microcontroller-Based Power Converters | Peak Current Mode | 4.5 V | 4.3 V | 7 V | 3.3 mA | 1 A | 100 | 20 Ld QSOP |
| ISL6730 | Power Factor Correction Controller | Peak Current Mode | 9.65 V | 7.25 V | 20 V | 3.3mA | 2.8A | 98.5 | 8 Ld SOIC, 8 Ld MSOP |
| ISL6840 | Improved Industry-Standard Single-Ended PWM Controller | Peak Current Mode | 7 V | 6.6 V | 20 V | 2.3 mA | 1 A | 100 | 10 Ld MSOP |
| ISL6841 | Improved Industry-Standard Single-Ended PWM Controller | Peak Current Mode | 7 V | 6.6 V | 20 V | 2.3 mA | 1 A | 50 | 8 Ld DFN, 8 Ld MSOP, 8 Ld SOIC |
| ISL6842 | Improved Industry-Standard Single-Ended PWM Controller | Peak Current Mode | 14.4 V | 8.8 V | 20 V | 2.3 mA | 1 A | 100 | 8 Ld DFN, 8 Ld MSOP, 8 Ld SOIC |
| ISL6843 | Improved Industry-Standard Single-Ended PWM Controller | Peak Current Mode | 8.4 V | 7.6 V | 20 V | 2.3 mA | 1 A | 100 | 8 Ld DFN, 8 Ld MSOP, 8 Ld SOIC |
| ISL6844 | Improved Industry-Standard Single-Ended PWM Controller | Peak Current Mode | 14.4 V | 8.8 V | 20 V | 2.3 mA | 1 A | 50 | 8 Ld DFN, 8 Ld MSOP, 8 Ld SOIC |
| ISL6845 | Improved Industry-Standard Single-Ended PWM Controller | Peak Current Mode | 8.4 V | 7.6 V | 20 V | 2.3 mA | 1 A | 50 | 8 Ld DFN, 8 Ld MSOP, 8 Ld SOIC |
| ISL78215 | Improved Industry Standard Single-Ended Current Mode PWM Controller | Peak Current Mode | 7 V | 6.6 V | 20 V | 3.3 mA | 1 A | 48 | 8 Ld DFN, 8 Ld MSOP, 8 Ld SOIC |
| ISL8130 | Advanced Single Universal Pulse-Width Modulation (PWM) Controller | Voltage Mode | 4.4V | 4.1V | 28 V | 2 mA | 1 A | 100 | 20 Ld QFN, 20 Ld QSOP |
| ISL8840A | High Performance Industry Standard Single-Ended Current Mode PWM Controller | Peak Current Mode | 7 V | 6.6 V | 30 V | 2.9 mA | 1 A | 100 | 8 Ld MSOP, 8 Ld SOIC |
| ISL8841A | High Performance Industry Standard Single-Ended Current Mode PWM Controller | Peak Current Mode | 7 V | 6.6 V | 30 V | 2.9 mA | 1 A | 50 | 8 Ld MSOP, 8 Ld SOIC |
| ISL8842A | High Performance Industry Standard Single-Ended Current Mode PWM Controller | Peak Current Mode | 14.4 V | 8.8 V | 30 V | 2.9 mA | 1 A | 100 | 8 Ld MSOP, 8 Ld SOIC |
| ISL8843 | High Performance Industry Standard Single-Ended Current Mode PWM Controller | Peak Current Mode | 8.4 V | 7.6 V | 30 V | 2.9 mA | 1 A | 100 | 8 Ld MSOP, 8 Ld SOIC |
| ISL8843A | Single-Ended Current Mode PWM Controller with 3% Current Limit and Military Temp Grade Option | Peak Current Mode | 8.4 V | 7.6 V | 30 V | 2.9 mA | 1 A | 100 | 8 Ld MSOP, 8 Ld SOIC |
| ISL8844A | High Performance Industry Standard Single-Ended Current Mode PWM Controller | Peak Current Mode | 14.4 V | 8.8 V | 30 V | 2.9 mA | 1 A | 50 | 8 Ld MSOP, 8 Ld SOIC |
| ISL8845A | High Performance Industry Standard Single-Ended Current Mode PWM Controller | Peak Current Mode | 8.4 V | 7.6 V | 30 V | 2.9 mA | 1 A | 50 | 8 Ld MSOP, 8 Ld SOIC |

### ACPI REQULATORS/CONTROLLERS

| Device | Device Description | Chip Set Supported | 3.3V Dual Regulator | 5V Dual Regulator | Memory Regulator (V) | Integrated Clock Regulator | Southbridge Resume Well Regulator (V) | VID Regulator (V) | 3.3V SBY Regulator | Package |
|---|---|---|---|---|---|---|---|---|---|---|
| HIP6501A | Triple Linear Power Controller with ACPI Control Interface | i810/i810e/i815/i820, SiS620/5595, SiS630, VIA Apollo ProMedia133 | Yes | Yes | 2.5 or 3.3 (Selectable) | | | | No | 16 Ld SOIC |
| HIP6503 | Multiple Linear Power Controller with ACPI Control Interface | i810/i820 with ICH2 | Yes | Yes | 2.5 or 3.3 (Selectable) | Yes | 1.8 | | No | 20 Ld SOIC |
| ISL6504 | Multiple Linear Power Controller with ACPI Control Interface | i845G with ICH4 | Yes | Yes | | No | 1.8 | 1.2 | No | 20 Ld QFN, 16 Ld SOIC |
| ISL6504A | Multiple Linear Power Controller with ACPI Control Interface | i845G with ICH4 | Yes | Yes | | No | 1.5 | 1.2 | No | 20 Ld QFN, 16 Ld SOIC |
| ISL6505 | Multiple Linear Power Controller with ACPI Control Interface | Springdale with ICH5 | Yes | Yes | | No | | 1.2 | No | 20 Ld QFN, 16 Ld SOIC |
| ISL6506 | Multiple Linear Power Controller with ACPI Control Interface | i810, i815, i820, i845, i865, i875, i915, i925, i945, i955 for ICH4, ICH5, ICH6 | Yes | Yes | No | No | No | No | Yes | 8 Ld SOIC |
| ISL6506A | Multiple Linear Power Controller with ACPI Control Interface | i810, i815, i820, i845, i865, i875, i915, i925, i945, i955 for ICH4, ICH5, ICH6, ICH7 | Yes | Yes | No | No | No | No | Yes | 8 Ld SOIC |
| ISL6506B | Multiple Linear Power Controller with ACPI Control Interface | i810, i815, i820, i845, i865, i875, i915, i925, i945, i955 for ICH4, ICH5, ICH6, ICH8 | Yes | Yes | No | No | No | No | Yes | 8 Ld SOIC |
| ISL6506BI | Multiple Linear Power Controller with ACPI Control Interface | i810, i815, i820, i845, i865, i875, i915, i925, i945, i955 for ICH4, ICH5, ICH6, ICH8 | Yes | Yes | No | No | No | No | Yes | 8 Ld SOIC |

## NON-ISOLATED PWM CONTROLLERS (CONTINUED)

### MULTIPLE OUTPUT CONTROLLERS

| # of Outputs | Device | Device Description | $V_{IN}$ (min) (V) | $V_{IN}$ (max) (V) | $V_{OUT}$ (min) (V) | $V_{OUT1}$ (max) (V) | $I_{OUT1}$ (max) (A) | Switching Frequency (kHz) | Bias Voltage ($V_{CC}$) | Package |
|---|---|---|---|---|---|---|---|---|---|---|
| 2 | 3.3V or 5V Input | | | | | | | | | |
| | ISL6532 | ACPI Regulator/Controller for Dual Channel DDR Memory Systems | 2.5 | 5 | 0.8 | 5 | 20 | 250 | 5 V | 20 Ld QFN |
| | ISL6528 | Dual Regulator-Standard Buck PWM and Linear Power Controller | 3.3 | 5 | 0.8 | 3.3 | 15 | 600 | 5 V | 8 Ld SOIC |
| | ISL6529 | Dual Regulator-Synchronous Rectified Buck PWM and Linear Power Controller | 3.3 | 5 | 0.8 | 3.3 | 15 | 600 | 12 V | 14 Ld SOIC, 16 Ld QFN |
| | ISL6530 | Dual 5V Synchronous Buck Pulse-Width Modulator (PWM) Controller for DDRAM Memory VDDQ and VTT Termination | 5 | 5 | 0.8 | 5 | 1 | 300 | 5 V | 32 Ld QFN, 24 Ld SOIC |
| | 12V Input | | | | | | | | | |
| | ISL6549 | Single 12V Input Supply Dual Regulator - Synchronous Rectified Buck PWM and Linear Power Controller | 10.8 | 13.2 | 0.8 | 13.2 | 20 | 150 to 1000 | 12 V | 14 Ld SOIC, 16 Ld QFN, 16 Ld QSOP |
| | ISL6539 | Wide Input Range Dual PWM Controller with DDR Option | 3.3 | 18 | 0.9 | 5.5 | 8 | 300 | 6.5 V | 28 Ld QFN, 28 Ld QSOP |
| | 24V Input | | | | | | | | | |
| | ISL6227 | Dual Mobile-Friendly PWM Controller with DDR Option | 3.3 | 24 | 0.9 | 5.5 | 16 | 300 | 5 V | 28 Ld QFN, 28 Ld QSOP |
| | ISL6440 | 300kHz Dual, 180 Out-of-Phase, Step-Down PWM Controller | 4.5 | 24 | 0.8 | 24 | 10 | 300 | 5 V | 24 Ld QSOP |
| | ISL6444 | PWM Controller with DDR Memory Option for Gateway Applications | 3.3 | 24 | 0.9 | 5.5 | 8 | 300 | 5 V | 28 Ld QSOP |
| | ISL6445 | 1.4MHz Dual, 180 Out-of-Phase, Step-Down PWM Controller | 4.5 | 24 | 0.8 | 24 | 6 | 1400 | 5 V | 24 Ld QSOP |
| | ISL6228 | High-Performance Dual-Output Buck Controller for Notebook Applications | 3.3 | 25 | 0.6 | 5 | 20 | 200 to 600 | 5 V | 28 Ld TQFN |
| | ISL8112 | High Light-Load Efficiency, Dual-Output, Main Power Supply Controllers | 5.5 | 25 | 0.7 | 5.5 | 30 | 400/500, 300/400, 200/300 | | 32 Ld QFN |
| 3 | 3.3V or 5V Input | | | | | | | | | |
| | HIP6018B | Advanced PWM and Dual Linear Power Control | 5 | 5 | 1.3 | 3.5 | 25 | 50 to 1000 | 12 V | 24 Ld SOIC |
| | ISL6532A | 3-in-1 ACPI Regulator/Controller for Dual Channel DDR and DDR2 Memory Systems | 2.5 | 5 | 0.8 | 5 | 20 | 250 | 5 V | 28 Ld QFN |
| | ISL6271A | Integrated XScale Regulator | 2.76 | 5.5 | 0.85 | 1.6 | 0.8 | 1200 | 3.7 V | 20 Ld QFN |
| | 12V Input | | | | | | | | | |
| | ISL6534 | Dual PWM with Linear | 3.3 | 12 | 0.6 | 9 | 20 | 300 to 1000 | 5 V | 32 Ld QFN, 24 Ld TSSOP |
| | 24V Input | | | | | | | | | |
| | ISL6441 | 1.4MHz Dual, 180 Out-of-Phase, Step-Down PWM and Single Linear Controller | 4.5 | 24 | 0.8 | 24 | 6 | 1400 | 5 V | 28 Ld QFN |
| | ISL6442 | 2.5MHz Dual, 180 Out-of-Phase, Step-Down PWM and Single Linear Controller | 4.5 | 24 | 0.8 | 24 | 20 | 300 to 2500 | 5 V | 24 Ld QSOP |
| | ISL6443 | 300kHz Dual, 180 Out-of-Phase, Step-Down PWM and Single Linear Controller | 4.5 | 24 | 0.8 | 24 | 10 | 300 | 5 V | 28 Ld QFN |
| | ISL6443A | 300kHz Dual, 180 Out-of-Phase, Step-Down PWM and Single Linear Controller | 4.5 | 24 | 0.8 | 24 | 10 | 300 | 5 V | 28 Ld QFN, 28 Ld TSSOP |
| | ISL6446/A | Dual (180 Out-of-Phase) PWM and Linear Controller | 4.5 | 24 | 0.6 | 24 | 25 | 100kHz to 2.5MHz | 5 V | 24 Ld QSOP |
| | ISL9440 | Triple, 180 Out-of-Phase, Step-Down PWM and Single Linear Controller | 4.5 | 24 | 0.8 | 24 | 20 | 300 | 5 V | 32 Ld QFN |
| | ISL9440A | Triple, 180 Out-of-Phase, Step-Down PWM and Single Linear Controller | 4.5 | 24 | 0.8 | 24 | 20 | 600 | 5 V | 32 Ld QFN |
| | ISL9440B | Triple Step-Down PWM and Single Linear Controller with Programmable Soft-Start | 4.5 | 24 | 0.8 | 24 | 0.8 | 300 | 5 V | 32 Ld QFN |
| | ISL9440C | Triple Step-Down PWM and Single Linear Controller with Programmable Soft-Start | 4.5 | 24 | 0.8 | 24 | 20 | 600 | 5 V | 32 Ld QFN |
| | ISL9441 | Triple, 180 Out-of-Phase, Step-Down PWM and Single Linear Controller | 4.5 | 24 | 0.8 | 24 | 20 | 300 | 5 V | 32 Ld QFN |
| | ISL88550A | Synchronous Step Down Controller with Sourcing and Sinking LDO Regulator | 2 | 25 | 0.7 | 3.5 | 15 | 200, 300, 450, 600 | 5 V | 28 Ld TQFN |
| | ISL62391/C | High-Efficiency, Triple-Output System Power Supply Controller for Notebook Computers | 5.5 | 25 | 0.6 | 5.5 | 20 | 200 to 600 | | 28 Ld TQFN |
| | ISL62392/C | High-Efficiency, Triple-Output System Power Supply Controller for Notebook Computers | 5.5 | 25 | 0.6 | 5.5 | 20 | 200 to 600 | | 28 Ld TQFN |
| | ISL9443 | Triple, 180 Out-of-Phase, Synchronous Step-Down PWM Controller | 4.5 | 26 | 0.7 | 26 | 20 | 200 to 1200 | 5 V | 32 Ld QFN |
| | ISL9444 | Triple, 180 Out-of-Phase, Synchronous Step-Down PWM Controller | 4.5 | 26 | 0.7 | 26 | 20 | 200 to 1200 | 5 V | 40Ld QFN |
| 4 | 3.3V or 5V Input | | | | | | | | | |
| | HIP6019B | Advanced Dual PWM and Dual Linear Power Control | 5 | 5 | 1.3 | 3.5 | 25 | 50 to 1000 | 12 V | 28 Ld SOIC |
| | HIP6021 | Advanced PWM and Triple Linear Power Controller | 5 | 5 | 1.3 | 3.5 | 25 | 50 to 1000 | 12 V | 28 Ld SOIC |
| | HIP6521 | PWM and Triple Linear Power Controller | 5 | 5 | 0.8 | 4.5 | 20 | 300 | 5 V | 16 Ld SOIC |
| | ISL6521 | PWM Buck DC/DC and Triple Linear Power Controller | 5 | 5 | 0.8 | 4.5 | 20 | 300 | 5 V | 16 Ld SOIC |
| | ISL6537 | ACPI Regulator/Controller for Dual Channel DDR Memory Systems | 4.5 | 5.5 | 0.8 | 5.5 | 25 | 250 | 5 V | 28 Ld QFN |
| | ISL6548 | ACPI Regulator/Controller for Dual Channel DDR Memory Systems | 4.5 | 5.5 | 0.8 | 5.5 | 25 | 250 | 5 V | 28 Ld QFN |
| | 24V Input | | | | | | | | | |
| | ISL6232 | High Efficiency System Power Supply Controller for Notebook Computers | 5.5 | 25 | 0.8 | 5.5 | 12 | 300 | | 28 Ld QSOP |
| | ISL6236, ISL6237 | High-Efficiency, Quad-Output, Main Power Supply Controllers for Notebook Computers | 5.5 | 25 | 0.7 | 5.5 | 20 | 400/500, 400/300, 200/300 | | 32 Ld QFN |
| | ISL6236A | High-Efficiency, Quad-Output, Main Power Supply Controllers for Notebook Computers | 4.5 | 25 | 0.7 | 5.5 | 20 | 400/500, 400/300, 200/300 | | 32 Ld QFN |
| | ISL62381/C, ISL62382/C, ISL62383/C, ISL62386 | High-Efficiency, Quad or Triple-Output System Power Supply Controller for Notebook Computers | 5.5 | 25 | 0.6 | 5.5 | 20 | Programmable | | 32 Ld TQFN |
| 5 | 3.3V or 5V Input | | | | | | | | | |
| | ISL6537A | ACPI Regulator/Controller for Dual Channel DDR Memory Systems | 4.5 | 5.5 | 0.8 | 5.5 | 25 | 250 | 5 V | 28 Ld QFN |
| | ISL6548A | ACPI Regulator/Controller for Dual Channel DDR Memory Systems | 4.5 | 5.5 | 0.8 | 5.5 | 25 | 250 | 5 V | 28 Ld QFN |

## NON-ISOLATED PWM CONTROLLERS (CONTINUED)

### MULTIPHASE CONTROLLERS (VR12 AND VR12.5)

| Gen | Device | Configuration | Modulator | Drivers | APD | PMBus | Package |
|---|---|---|---|---|---|---|---|
| VR12 | ISL6364A | 4+1 | EAPP | Ext | Yes | No | 48 Ld 6x6 QFN |
| | ISL6367 | 6+1 | EAPP | Ext | Yes | Yes | 60 Ld 7x7 QFN |
| VR12 & VR12.5 | ISL6367H | 6+1 | EAPP | Ext | Yes | Yes | 60 Ld 7x7 QFN |
| VR12.5 | ISL6376 | 6-ph | EAPP | Ext | Yes | Yes | 48 Ld 6x6 QFN |
| | ISL6375 | 5-ph | EAPP | Ext | Yes | Yes | 40 Ld 5x5 QFN |
| | ISL6374 | 4-ph | EAPP | Ext | Yes | No | 40 Ld 5x5 QFN |
| | ISL6373 | 4-ph | EAPP | Ext | Yes | Yes | 40 Ld 5x5 QFN |
| | ISL6388† | 6-ph | EAPP | Ext | Yes | Yes | 40 Ld 5x5 QFN |
| Memory | ISL6353 | 3-ph | R3 | 2x Int | No | No | 40 Ld 5x5 QFN |
| | ISL6373 | 4-ph | EAPP | Ext | Yes | Yes | 40 Ld 5x5 QFN |
| | ISL6374 | 4-ph | EAPP | Ext | Yes | No | 40 Ld 5x5 QFN |
| | ISL6388 | 6-ph | EAPP | Ext | Yes | Yes | 40 Ld 5x5 QFN |

### MULTIPHASE CONTROLLERS (GENERAL PURPOSE)

| Device | Device Description | $V_{IN}$ (min) (V) | $V_{IN}$ (max) (V) | $V_{OUT}$ (min) (V) | $V_{OUT}$ (max) (V) | $I_{OUT}$ (max) (A) | $V_{BIAS}$ (V) | Applications | Max # of Outputs | Max # of Phases | VID | Package |
|---|---|---|---|---|---|---|---|---|---|---|---|---|
| General Purpose | | | | | | | | | | | | |
| ISL6310 | Two-Phase Buck PWM Controller with High Current Integrated MOSFET Drivers | 5 | 12 | 0.6 | 2.3 | 60 | 4.75 to 5.25 | General Purpose | 1 | 2 | No VID | 32 Ld QFN |
| ISL6315 | Two-Phase Multiphase Buck PWM Controller with MOSFET Drivers Integrated (No Droop) | 5 | 12 | 0.84 | 1.6 | 60 | 4.75 to 5.25 | General Purpose | 1 | 2 | No VID | 24 Ld QFN |
| ISL6567 | Multipurpose Two-Phase Buck PWM Controller with Integrated MOSFET Drivers | 3 | 20 | 0.6 | 5 | 60 | 4.9 to 5.5 | General Purpose | 1 | 2 | No VID | 24 Ld QFN |
| ISL8120 | Dual/n-Phase Buck PWM Controller with Integrated Drivers | 2.97 | 22 | 0.6 | 19.8 | 60 | 3 to 5.6 | General Purpose | 2 | 2 | No VID | 32 Ld QFN |
| ISL8121 | 3V to 20V, Two-Phase Buck PWM Controller with Integrated 4A MOSFET Drivers | 3 | 20 | 0.6 | 13.2 | 60 | 4.9 to 5.5 | General Purpose | 1 | 2 | No VID | 24 Ld QFN |
| ISL8126 | Dual/n-Phase Buck PWM Controller with Integrated Drivers | 3 | 26.5 | 0.6 | 23.85 | 60 | 2.97 to 5.60 | General Purpose | 2 | 2 | No VID | 32 Ld QFN |
| ISL9506 | Multiphase PWM Controller with Programmable Output Voltage | 4.75 | 5.25 | 0.3 | 1.5 | 90 | 4.75 to 5.25 | General Purpose | 1 | 3 | Yes | 40 Ld QFN |
| ISL6308A | Three-Phase Buck PWM Controller with High Current Integrated MOSFET Drivers | 5 | 12 | 0.6 | 2.3 | 100 | 4.75 to 5.25 | General Purpose | 1 | 3 | No VID | 40 Ld QFN |
| ISL6558 | Multi-Purpose Precision Multiphase PWM Controller With Optional Active Voltage Positioning | 4.75 | 12 | 0.8 | 5 | 120 | 4.75 to 5.25 | General Purpose | 1 | 4 | No VID | 16 Ld SOIC, 20 Ld QFN |
| ISL6564A | Multiphase PWM Controller with Linear 6-Bit DAC Capable of Precision $r_{DS(ON)}$ or DCR Differential Current Sensing | 3 | 12 | 0.525 | 1.3 | 120 | 5, 12 | General Purpose | 1 | 4 | Yes | 40 Ld QFN |

**To see the complete device listing, visit www.intersil.com**

# INTEGRATED FET SWITCHING REGULATORS

## BUCK REGULATORS

| Device | Device Description | $V_{IN}$ Range (V) | $I_{OUT}$ (max) (A) | $V_{OUT}$ Range (V) | $I_Q$ (typ) | Switching Freq (MHz) | Package | Eval Kit |
|---|---|---|---|---|---|---|---|---|
| Single Output 2.7V - 5.5V | | | | | | | | |
| ISL80019/A | Sync Buck Regulator | 2.7 - 5.5 | 1.5 | 0.6 - $V_{IN}$ | 35µA | 2.3 | 8 Ld 2x2 TDFN | ✓ |
| ISL8002/A | Sync Buck Regulator | 2.7 - 5.5 | 2 | 0.6 - $V_{IN}$ | 35µA | 2.3 | 8 Ld 2x2 TDFN | ✓ |
| ISL8023/A | Sync Buck Regulator | 2.7 - 5.5 | 3 | 0.6 - 5.5 | 50µA | 4 | 16 Ld 3x3 TQFN | ✓ |
| ISL8024/A | Sync Buck Regulator | 2.7 - 5.5 | 4 | 0.6 - 5.5 | 50µA | 4 | 16 Ld 3x3 TQFN | ✓ |
| ISL8025/A | Sync Buck Regulator | 2.7 - 5.5 | 5 | 0.6 - $V_{IN}$ | 50µA | 2.4 | 16 Ld 3x3 TQFN | ✓ |
| ISL8016 | Sync Buck Regulator | 2.7 - 5.5 | 6 | 0.6 - 5.5 | 70µA | 4 | 20 Ld 3x4 QFN | ✓ |
| Single Output 3V - 18V | | | | | | | | |
| ISL85003 | Sync Buck Regulator | 3 - 18 | 3 | 0.8 - 12 | 2mA | 0.6 | 12 Ld 4x3 DFN | ✓ |
| Single Output 3V - 38V | | | | | | | | |
| ISL85415 | Sync Buck Regulator | 3 - 36 | 0.5 | 0.6 - 95% of $V_{IN}$ | 80µA | 2 | 12 Ld 4x3 DFN | ✓ |
| ISL85418 | Sync Buck Regulator, Wide $V_{IN}$ | 3 - 36 | 0.8 | 0.6 - 95% of $V_{IN}$ | 80µA | 2 | 12 Ld 4x3 DFN | ✓ |
| ISL85410 | Sync Buck Regulator, Wide $V_{IN}$ | 3 - 36 | 1 | 0.6 - 95% of $V_{IN}$ | 80µA | 2 | 12 Ld 4x3 DFN | ✓ |
| Single Output 40V | | | | | | | | |
| ISL8540 | Standard Buck Regulator | 9 - 40 | 2 | 1.21 - 35 | 60µA | 0.6 | 20 Ld 6.5x6.4 HTSSOP | ✓ |
| Single Output 60V | | | | | | | | |
| ISL8560 | Standard Buck Regulator | 9 - 60 | 2 | 1.21 - 55 | 60µA | 0.6 | 20 Ld 6x6 QFN | ✓ |
| Dual Output 2.7V - 5.5V | | | | | | | | |
| ISL8088 | Dual Sync Buck Regulator, Pin Compatible with LTC3407-2 | 2.75 - 5.5 | 0.8 | 0.6 - 5.5 | 30µA | 2.25 | 10 Ld 3x3 DFN | ✓ |
| ISL8022 | Dual Sync Buck Regulator | 2.8 - 5.5 | 2.0 / 1.7 | 0.6 - 5.5 | 40µA | 2.25 | 12 Ld 4x3 DFN | ✓ |
| ISL8033/A | Dual Sync Buck Regulator | 2.85 - 6 | 3 / 3 | 0.8 - 6 | 15mA | 1/2.5 (A ver) | 24 Ld 4x4 QFN | ✓ |
| ISL8036/A | Dual Sync Buck Regulator | 2.85 - 6 | 3 / 3 | 0.8 - 6 | 15mA | 1 | 24 Ld 4x4 QFN | ✓ |
| Dual Output 3V - 28V | | | | | | | | |
| ISL85033 | Dual Standard Buck Regulator, Wide $V_{IN}$ | 4.5 - 28 | 3 | 0.8 - 28 | 1.2mA | 2 | 28 Ld 4x4 TQFN | ✓ |
| Quad Output 2.5V - 5.5V | | | | | | | | |
| ISL9305 | Dual Buck Regulator and Dual LDO with $I^2C$ | 2.3 - 5.5 | 0.8 | 0.8 - 5.5 | 50µA | 2.6 | 16 Ld 4x4 TQFN | ✓ |
| ISL9305H | Dual Buck Regulator and Dual LDO with $I^2C$ | 2.5 - 5.5 | 1.5 | 0.8 - 5.5 | 50µA | 2.6 | 16 Ld 4x4 TQFN | ✓ |
| ISL9307 | Dual Buck Regulator and Dual LDO | 2.5 - 5.5 | 1.5 | 0.9 - 3.3 | 50µA | 2.6 | 16 Ld 4x4 TQFN | ✓ |

## BUCK-BOOST REGULATORS

| Device | Device Description | $V_{IN}$ Range (V) | $I_{SW}$ (max) (A) | $V_{OUT}$ Range (V) | $I_Q$ (typ) | Switching Freq (MHz) | Package | Eval Kit |
|---|---|---|---|---|---|---|---|---|
| Single Output 1.8V - 5.5V | | | | | | | | |
| ISL9110/A | Sync Buck-Boost Regulator | 1.8 - 5.5 | 2 | 1 - 5.2 | 35µA | 2.5 | 12 Ld 3x3 DFN, 20 Bump WLCSP (A ver) | ✓ |
| ISL9112 | Sync Buck-Boost Regulator with $I^2C$ | 1.8 - 5.5 | 2 | 1.9 - 5 | 35µA | 2.5 | 12 Ld 3x3 DFN | ✓ |
| ISL91108 | Sync Buck-Boost Regulator | 1.8 - 5.5 | 3.7 | 1 - 5.2 | 27.5µA | 2.6 | 20 Bump WLCSP | ✓ |
| ISL91110 | Sync Buck-Boost Regulator | 1.8 - 5.5 | 4 | 1 - 5.2 | 35µA | 2.5 | 20 Bump WLCSP | ✓ |

## BOOST REGULATORS

| Device | Device Description | $V_{IN}$ Range (V) | $I_{SW}$ (max) (A) | $V_{OUT}$ Range (V) | $I_Q$ (typ) | Switching Freq (MHz) | Package | Eval Kit |
|---|---|---|---|---|---|---|---|---|
| Single Output 1.8V - 5.5V | | | | | | | | |
| ISL97701 | Standard Boost Regulator with Integrated Schottky and Input Disconnect Switch | 2.3 - 5.5 | 0.5 | 4.3 - 28 | 900µA | 1 | 10 Ld 3x3 DFN | ✓ |
| ISL9111/A | Sync Boost Regulator, Low Input Voltage | 0.5 - 5.25 | 0.8 | 2.5 - 5.25 | 20µA | 1.2 | 6 Ld 2.9x2.8 SOT | ✓ |
| ISL9113 | Sync Boost Regulator, Low Input Voltage | 0.8 - 4.7 | 1.1 | 1 - 5.2 | 20µA | 1.8 | 8 Ld 2x2 DFN, 6 Bump WLCSP | ✓ |
| ISL97519/A | Standard Boost Regulator | 2.3 - 5.5 | 1.5 | 1.1 - 25 | | 1.2 | 8 Ld 3x4.9 MSOP | ✓ |
| ISL97516 | Standard Boost Regulator | 2.3 - 5.5 | 1.7 | 1.1 - 25 | 700µA | 1.2 | 8 Ld 3x4.9 MSOP | ✓ |
| ISL91117 | Sync Boost Converter with Output Disconnect | 1.8 - 4.8 | 3.5 | Up to 5.2 | 35µA | 2.5 | 20 Bump WLCSP | ✓ |
| ISL97656 | Standard Boost Regulator | 2.3 - 6 | 3.8 | 1.1 - 24 | 700µA | 1.2 | 10 Ld 3x3 DFN | ✓ |
| Single Output 12V | | | | | | | | |
| ISL98012 | Standard Boost Regulator | 1.8 - 13.2 | 1 | 4.5 - 17 | 1.4mA | 670kHz | 10 Ld 3x4.9 MSOP | ✓ |

# PMIC

### PMIC

| Device | Device Description | # of Outputs | Switching Frequency (kHz) | DCD1 & DCD2 $V_{IN}$ (V) | LDO1 & LDO2 $V_{IN}$ (V) | DCDC1 & DCD2 $V_{OUT}$ (V) | LDO1 & LDO2 $V_{OUT}$ (V) | DCDC Max $I_{OUT}$ (mA) | LDO Max $I_{OUT}$ (mA) | $I^2C$ | Package |
|---|---|---|---|---|---|---|---|---|---|---|---|
| ISL9305 | 3MHz Dual Step-Down Converters and Dual Low-Input LDOs with $I^2C$ Compatible Interface | 4 | 3000 | 2.3 to 5.5 | 1.5 to 5.5 | 0.8 to $V_{IN}$ | 0.9 to 3.3 | 800 | 300 | Yes | 16 Ld TQFN |
| ISL9305H | 3MHz Dual 1.5A Step-Down Converters and Dual Low-Input LDOs with $I^2C$ Compatible Interface | 4 | 3000 | 2.5 to 5.5 | 1.5 to 5.5 | 0.8 to $V_{IN}$ | 0.9 to 3.3 | 1500 | 300 | Yes | 16 Ld TQFN |
| ISL9307 | 3MHz Dual 1500mA Step-Down Converters and Dual Low-Input LDOs | 4 | 3000 | 2.5 to 5.5 | 1.5 to 5.5 | 0.8 to $V_{IN}$ | 0.9 to 3.3 | 1500 | 300 | No | 16 Ld TQFN |

### APPLICATION SPECIFIC PMIC

| Device | Device Description | # of Outputs | $V_{IN}$ (min) (V) | $V_{IN}$ (max) (V) | Switching Frequency (typ) (kHz) | Linear Output | Applications | Package |
|---|---|---|---|---|---|---|---|---|
| ISL78419 | Integrated Automotive TFT-LCD Power Supply Regulator | 4 | 2.5 | 5.5 | 600/1200 | Yes | Automotive TFT-LCD | 28 Ld QFN |
| ISL1801 | sPMIC for Micro-Converter Bias and Drivers | 4 | 6 | 14 | - | Yes | Solar array micro-converters and other systems operating from a high voltage DC supply. | 48 Ld TSSOP |
| ISL80083 | 2.5MHz Integrated Power Management IC with $I^2C$ Compatible Interface | 2 | 2.7 | 20 | 2500 | Yes | Power cable | 25 Ld WLCSP |

# LDO / LINEAR REGULATORS

| Device | Device Description | $V_{IN}$ Range (V) | $V_{OUT}$ Range (V) | O/P Volt Accuracy (%) | $I_{OUT1}$ (max) | $I_{OUT2}$ (max) | PSRR @ 1kHz (dB) | $I_Q$ (typ) | Typical Drop-Out Voltage (mV) | Enable/ Shut-down | Package | Eval Kit |
|---|---|---|---|---|---|---|---|---|---|---|---|---|
| **Up to 6.5V** | | | | | | | | | | | | |
| ISL9003A | Low Noise LDO with Low $I_Q$, High PSRR | 2.3 - 6.5 | 1.5 - 3.3 | ±1.8 | 150mA | | 90 | 29µA | 200 @150mA | Yes | 5 Ld SC-70, 6 Ld µTDFN | ✓ |
| ISL9012 | Dual LDO with Low Noise, Low $I_Q$, and High PSRR | 2.3 - 6.5 | 1.5 - 3.3 | ±1.8 | 150mA | 300mA | 70 | 45µA | 250 @ 300mA | Yes | 10 Ld DFN | |
| ISL9016 | 150mA Dual LDO with Low Noise, High PSRR, and Low $I_Q$ | 1.8 - 6.5 | 1.2 - 3.3 | ±1.8 | 150mA | 150mA | 80 | 49µA | 250 @ 150mA | Yes | 6 Ld µTDFN | ✓ |
| ISL9021A | 250mA Single LDO with Low $I_Q$, Low Noise and High PSRR LDO | 1.5 - 5.5 | 0.9 - 3.3 | ±1.8 | 250mA | | 60 | 35µA | 150 @ 250mA | Yes | 4 Ball WLCSP, 6 Ld µTDFN | ✓ |
| ISL9000A | Dual LDO with Low Noise, Very High PSRR, and Low $I_Q$ | 2.3 - 6.5 | 1.5 - 3.3 | ±1.8 | 300mA | 300mA | 90 | 40µA | 250 @ 300mA | Yes | 10 Ld DFN | ✓ |
| ISL9001A | LDO with Low $I_{SUPPLY}$, High PSRR | 2.3 - 6.5 | 1.5 - 3.3 | ±1.8 | 300mA | | 90 | 25µA | 250 @ 300mA | Yes | 8 Ld DFN | ✓ |
| ISL9014A | Dual LDO with Low Noise, Low $I_Q$, and High PSRR | 2.3 - 6.5 | 1.5 - 3.3 | ±1.8 | 300mA | 300mA | 70 | 45µA | 250 @ 300mA | Yes | 10 Ld DFN | ✓ |
| ISL9007 | High Current LDO with Low $I_Q$ and High PSRR | 2.3 - 6.5 | 1.5 - 3.3 | ±1.8 | 400mA | | 75 | 50µA | 250 @ 400mA | Yes | 8 Ld MSOP | ✓ |
| ISL80101 | High Performance 1A LDO | 2.2 - 6.0 | 0.8 - 5.0 | ±1.8 | 1A | | 58 | 3mA | 130 @ 1A | Yes | 10 Ld DFN | ✓ |
| ISL80101-ADJ | High Performance Adjustable $V_{OUT}$ 1A LDO | 2.2 - 6.0 | 0.8 - 5.0 | ±1.8 | 1A | | 58 | 3mA | 130 @ 1A | Yes | 10 Ld DFN | ✓ |
| ISL80101A | High Performance Adjustable $V_{OUT}$ 1A LDO with Programmable Current Limiting | 2.2 - 6.0 | 0.8 - 5.0 | ±2.0 | 1A | | 48 | 3mA | 212 @ 1A | Yes | 10 Ld DFN | ✓ |
| ISL80111 | Ultra Low Dropout 1A Low Input Voltage NMOS LDO | 1 - 3.6 | 0.8 - 3.6 | ±1.6 | 1A | | 80 | 3.5mA | 27 | Yes | 10 Ld DFN | ✓ |
| ISL80121-5 | Fixed 5V Output 1A LDO with Programmable Current Limiting | 2.2 - 6.0 | 0.8 - 5.0 | ±1.8 | 1A | | 40 | 3mA | 130 @ 1A | Yes | 10 Ld DFN | ✓ |
| ISL80102 | High Performance 2A LDO | 2.2 - 6.0 | 0.8 - 5.0 | ±1.8 | 2A | | 55 | 7.5mA | 81 @ 2A | Yes | 10 Ld DFN | ✓ |
| ISL80112 | Ultra Low Dropout 2A Low Input Voltage NMOS LDOs | 1 - 3.6 | 0.8 - 3.6 | ±1.6 | 2A | | 80 | 3.5mA | 53 | Yes | 10 Ld DFN | ✓ |
| ISL80103 | High Performance 3A LDO | 2.2 - 6.0 | 0.8 - 5.0 | ±1.8 | 3A | | 55 | 7.5mA | 120 @ 3A | Yes | 10 Ld DFN | ✓ |
| ISL80113 | Ultra Low Dropout 3A Low Input Voltage NMOS LDO | 1 - 3.6 | 0.8 - 3.6 | ±1.6 | 3A | | 80 | 3.5mA | 75 | Yes | 10 Ld DFN | ✓ |
| **Up to 40V** | | | | | | | | | | | | |
| ISL80136 | 40V, Low Quiescent Current, 50mA Linear Regulator | 6 - 40 | 2.5 - 12 | ±1 | 50mA | | 58 | 18µA | 120 | Yes | 8 Ld EPSOIC | ✓ |
| ISL80138 | 40V, Low Quiescent Current, 150mA Linear Regulator | 6 - 40 | 2.5 - 12 | ±1 | 150mA | | 66 @ 100Hz | 18µA | 295 @ 150mA | Yes | 14 Ld HTSSOP | ✓ |

# POWER SUPPLY CONTROL

## HOT PLUG/ORING

### HIGH VOLTAGE HOT SWAP

| ACTIVE LOW #PGOOD | ACTIVE HIGH PGOOD |
|---|---|
| **ISL6140**<br>-10V to -80V Bias<br>-48V Hot Swap Controller | **ISL6150**<br>-10V to -80V Bias<br>-48V Hot Swap Controller |
| **ISL6141**<br>-20V to -80V Bias<br>-48V Hot Swap Controller<br>w/Current Regulation | **ISL6151**<br>-20V to-80V Bias<br>-48V Hot Swap Controller<br>w/Current Regulation |
| **ISL6142**<br>-20V to-80V Bias<br>-48V Hot Swap Controller<br>w/Load Current Monitor | **ISL6152**<br>-20V to-80V Bias<br>-48V Hot Swap Controller<br>w/Load Current Monitor |

### USB PROTECTION

**ISL6185/86**
2.3V – 6V, Iout preset
Dual / Single Integrated FETs

### ORING CONTROLLERS

| | |
|---|---|
| **ISL6144**<br>9V to 75V<br>High Voltage Controller | **ISL6146**<br>3V to 20V<br>Fast Protection Controller |

### LOW / MEDIUM VOLTAGE HOT SWAP

**ISL6115, ISL6115A**
+12V Bias
12V Hot Swap Controller
Enhanced GATE drive

**ISL6117**
+12V Bias
3.3V Hot Swap Controller

**ISL6173**
+2.5 – 3.3V Bias
< 3.3V Hot Swap Controller

**ISL6116**
+12V Bias
5V Hot Swap Controller

**ISL6120**
+12V Bias
2.5V Hot Swap Controller

### LOW / MEDIUM VOLTAGE DUAL HOT SWAP

**HIP1012A**
+12V Bias
12V & 5V or 5V & 3.3V
Current limiting

**HIP1013**
+12V Bias
12V & 5V or 5V & 3.3V
Circuit Breaker

**ISL6160**
+12V Bias
12V Main Ext FET
5V AUX Int FET

**ISL6161**
+12V Bias
12V & 3.3V
Current limiting

## VOLTAGE MONITORS

### SINGLE

**ISL88011**
- Fixed $V_{TRIP}$ + Adj POR
- Adjustable voltage threshold inputs down to 600mV

**ISL88014**
- Adjustable $V_{TRIP}$ + Adj POR
- Adjustable voltage threshold inputs down to 600mV

**ISL88013**
- Fixed $V_{TRIP}$
- Enhanced WDT with 1.6sec normal and 51sec start-up time out

**ISL88015**
- Adjustable $V_{TRIP}$

**ISL88016/17**
- Pin-select, 26 fixed $V_{TRIP}$

**ISL88001/2/3**
- 160nA 3Ld SC70/SOT23

### DUAL

**ISL88012**
- Adj $V_{TRIP}$ + Adj POR

**ISL88707/708**
- PFI/PFO + Adj POR

**ISL6132**
- Dual VMON, UV & OV
- Improved Pin-to-Pin Replacements

### TRIPLE

**ISL88021**
- Triple VMON, UV Monitor

**ISL88022**
- Triple VMON, UV & OV

### QUAD

**ISL88041**
- Quad Detector, Adj $V_{TRIP}$

**ISL88042**
- Quad VMON, Fixed +Adj VTH

**ISL6131**
- Individual RST Outputs

### QUINTUPLE

**ISL88031**
- Quintuple VMON
- Monitor up to five separate voltages with one chip

**To see the complete device listing, visit www.intersil.com**

# POWER SEQUENCERS

## LOW VOLTAGE SEQUENCERS

| Device | Device Description | $V_{BIAS}$ Range (V) | Sequenced Voltages or Range (V) | Enable | Logic Level | Sequenced Output Control | Initial Startup Requirements | Monitored Inputs | Channel That Turn-off When 1 UVLO Faults | Preset or Adjustable Sequence | Features | Package |
|---|---|---|---|---|---|---|---|---|---|---|---|---|
| ISL6123 | Power Sequencing Controllers | +1.5 to +5.5 | +0.7 to +5.5 | Active High | TTL | Charge Pumped 1µA FET Drive | 4 UVLO 1EN | 4 | 4 Gates | Adjustable ON & OFF Delay | Auto Restart, Low bias current sleep | 24 Ld QFN |
| ISL6124 | Power Sequencing Controllers | +1.5 to +5.5 | +0.7 to +5.5 | Active Low | CMOS | Charge Pumped 1µA FET Drive | 4 UVLO 1EN | 4 | 4 Gates | Adjustable ON & OFF Delay | Auto Restart | 24 Ld QFN |
| ISL6125 | Power Sequencing Controllers | +1.5 to +5.5 | N/A | Active Low | CMOS | Open Drain Logic | 4 UVLO 1EN | 4 | 4 Open Drain | Adjustable ON & OFF Delay | Auto Restart, Open Drain Sequenced Outputs | 24 Ld QFN |
| ISL6126 | Power Sequencing Controllers | +1.5 to +5.5 | +0.7 to +5.5 | Active Low | CMOS | Charge Pumped 1µA FET Drive | 1 UVLO 1EN | 4 | 1 Gate | Voltage Determined ON, Adjustable OFF Delay | Gates Independent On as UVLO Valid | 24 Ld QFN |
| ISL6127 | Power Sequencing Controllers | +1.5 to +5.5 | +0.7 to +5.5 | Active Low | CMOS | Charge Pumped 1µA FET Drive | 4 UVLO 1EN | 4 | 4 Gates | Preset Order | Auto Restart | 24 Ld QFN |
| ISL6128 | Power Sequencing Controllers | +1.5 to +5.5 | +0.7 to +5.5 | Active Low | CMOS | Charge Pumped 1µA FET Drive | 4 UVLO 2EN | 4 (2 Pairs) | 2 Gates | Preset Order | Dual Redundant Operation | 24 Ld QFN |
| ISL6130 | Power Sequencing Controllers | +1.5 to +5.5 | +0.7 to +5.5 | Active High | TTL | Charge Pumped 1µA FET Drive | 1 UVLO 1EN | 4 | 1 Gate | Voltage Determined ON, Adjustable OFF Delay | Gates Independent On as UVLO Valid, Low Bias Current Sleep | 24 Ld QFN |
| ISL8723 | Power Sequencing Controllers | +2.5 to +5.5 | +0.7 to +5.5 | Active High | TTL | Charge Pumped 10µA FET Drive | 4 UVLO 1EN | 4 | 4 Gates | Adjustable ON & OFF Delay | Auto Restart, Low Bias Current Sleep | 24 Ld QFN |
| ISL8724 | Power Sequencing Controllers | +2.5 to +5.5 | +0.7 to +5.5 | Active Low | CMOS | Charge Pumped 10µA FET Drive | 4 UVLO 1 EN | 4 | 4 Gates | Adjustable ON & OFF Delay | Auto Restart | 24 Ld QFN |

## HIGH VOLTAGE SEQUENCERS

| Device | Device Description | $V_{BIAS}$ (V) | Enable | Logic Level | Sequenced Output Control | Initial Startup Requirements | Monitored Inputs | Channels That Turn-On When $V_{IN}$ is Non-Compliant | Preset or Adjustable Sequence | Features | Package |
|---|---|---|---|---|---|---|---|---|---|---|---|
| ISL8700 | Adjustable Quad Sequencer | 2.5 to 24 | N/A | N/A | Active High, Open Drain | UV/OV | 1 | 4 Simultaneous | Preset Order, Adjustable Delay | | 14 Ld SOIC |
| ISL8700A | Adjustable Quad Sequencer | 3.3 to 24 | N/A | N/A | Active High, Open Drain | UV/OV | 1 | 4 Simultaneous | Preset Order, Adjustable Delay | | 14 Ld SOIC |
| ISL8701 | Adjustable Quad Sequencer | 2.5 to 24 | N/A | N/A | Active Low, Open Drain | UV/OV | 1 | 4 Simultaneous | Preset Order, Adjustable Delay | | 14 Ld SOIC |
| ISL8701A | Adjustable Quad Sequencer | 3.3 to 24 | N/A | N/A | Active Low, Open Drain | UV/OV | 1 | 4 Simultaneous | Preset Order, Adjustable Delay | | 14 Ld SOIC |
| ISL8702 | Adjustable Quad Sequencer | 2.5 to 12 | Active High | TTL | Active High, Open Drain | UV/OV & EN | 1 | 4 Simultaneous | Preset Order, Adjustable Delay | Fault Reporting | 14 Ld SOIC |
| ISL8702A | Adjustable Quad Sequencer | 3.3 to 24 | Active High | TTL | Active High, Open Drain | UV/OV & EN | 1 | 4 Simultaneous | Preset Order, Adjustable Delay | Fault Reporting | 14 Ld SOIC |
| ISL8703A | Adjustable Quad Sequencer | 3.3 to 24 | Active Low | TTL | Active Low, Open Drain | UV/OV & EN | 1 | 4 Simultaneous | Preset Order, Adjustable Delay | Fault Reporting | 14 Ld SOIC |
| ISL8704A | Adjustable Quad Sequencer | 3.3 to 24 | Active Low | TTL | Active High, Open Drain | UV/OV & EN | 1 | 4 Simultaneous | Preset Order, Adjustable Delay | Fault Reporting | 14 Ld SOIC |
| ISL8705A | Adjustable Quad Sequencer | 3.3 to 24 | Active Low | TTL | Active Low, Open Drain | UV/OV & EN | 1 | 4 Simultaneous | Preset Order, Adjustable Delay | Fault Reporting | 14 Ld SOIC |

**To see the complete device listing, visit www.intersil.com**

# SIGNAL PATH PRODUCTS

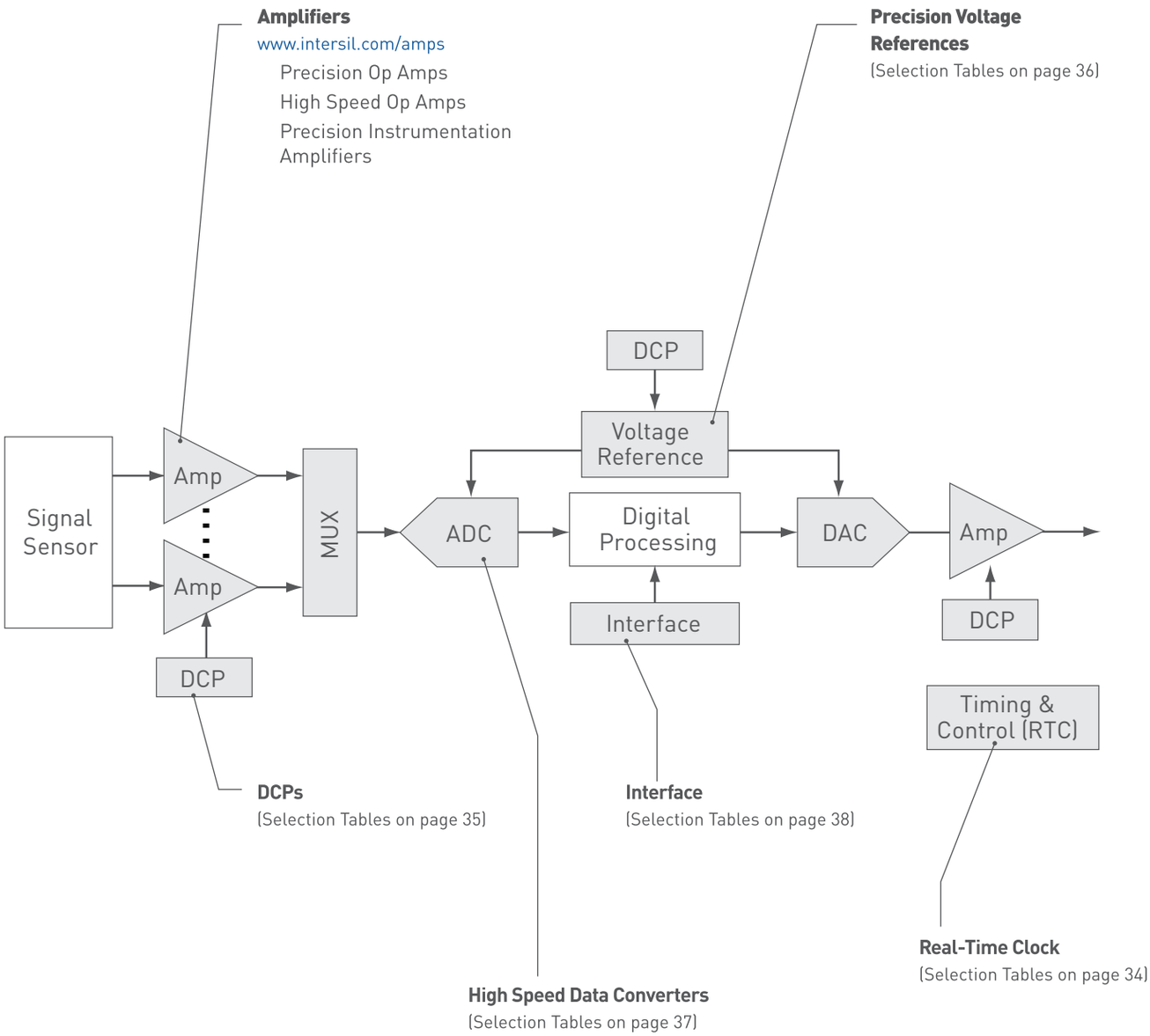

# APPLICATION BLOCK DIAGRAMS

**ISL3178AE: 3.3 V-powered, single transceiver provides ±15kV IEC61000 ESD protection.**

- Full fail-safe (open, short, terminated/floating) receivers
- True 1/8 unit load allows up to 256 devices on the bus
- High data rates: up to 10Mbps
- Low quiescent supply current: 800µA (max)

**Family Selection Table on page 38.**

**ISL28006: Micropower, uni-directional high-side and low-side current sense amplifier featuring a proprietary rail-to-rail input current sensing amplifier.**

- Low power consumption: 50µA, typ
- Supply range: 2.7V to 28V
- Wide common modeinput: 0V to 28V

**Family Selection Table on page 37.**

## BLADE SERVER

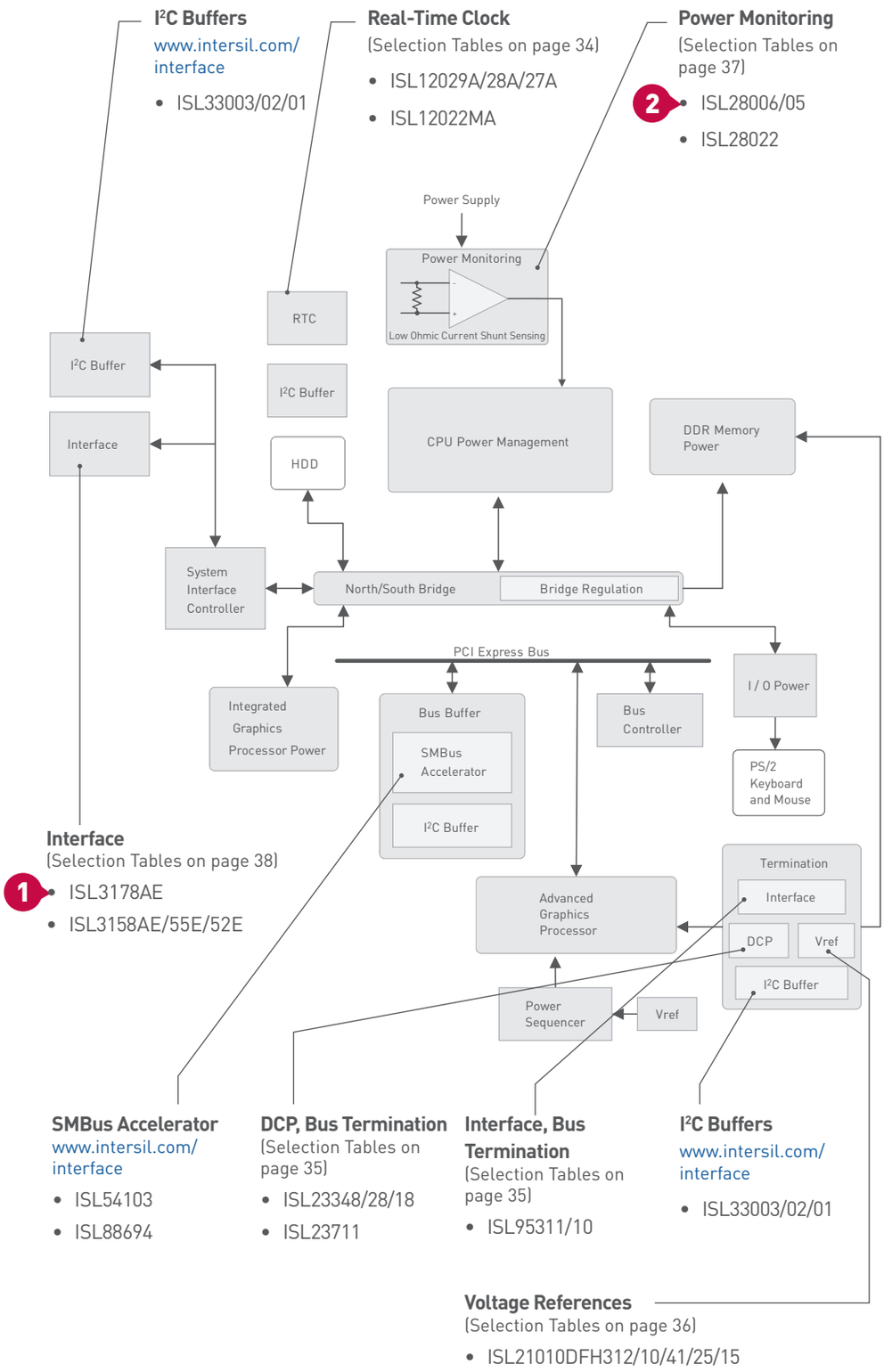

## CELL BASESTATION

**Tx DAC**
www.intersil.com
- ISL5927, ISL5957, ISL5961

**RX ADC**
(Selection Tables on page 37)
3 • ISLA224S25, ISLA224S20, ISLA224S12, ISLA224P25, ISLA224P20, ISLA224P13, ISLA224P12

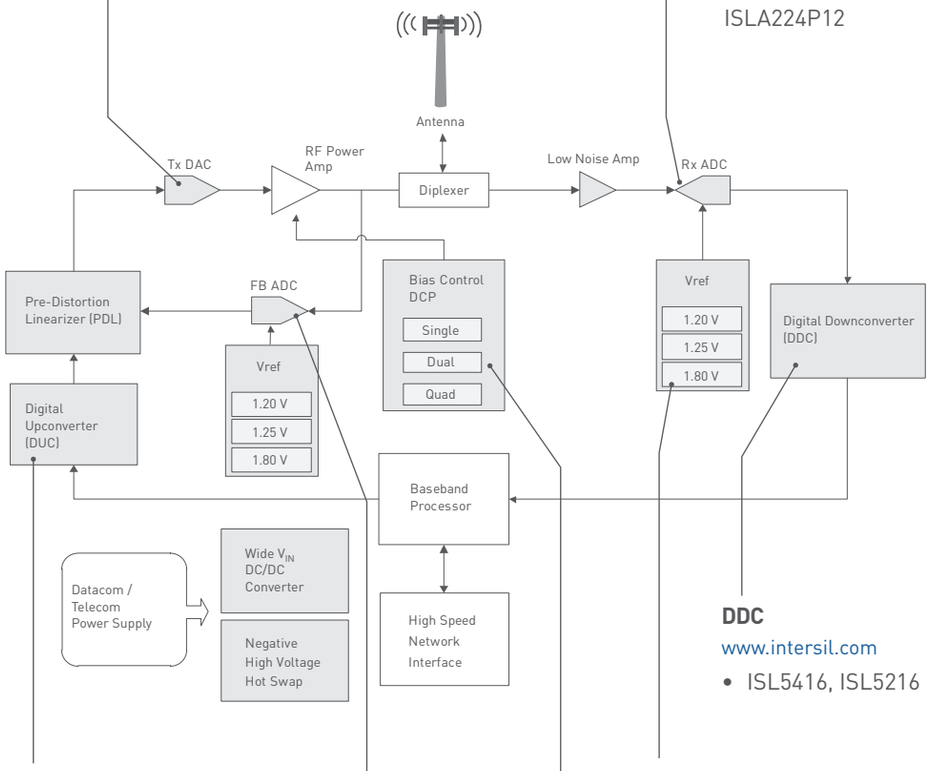


**DDC**
www.intersil.com
- ISL5416, ISL5216

**DUC**
www.intersil.com
- ISL5217, HSP50415

**Voltage Reference**
(Selection Tables on page 36)

**DCP**
(Selection Tables on page 35)
4 • ISL223x3/6, ISL224.4/6

**FB ADC**
(Selection Tables on page 37)
- ISLA214P50, ISLA212P50, ISLA214P25, ISLA212P25, ISLA214S50

3

**ISL224SX: Series of low-power, high-performance, dual-channel 14-bit, analog-to-digital converters supports sampling rates up to 250MSPS.**

- JESD204A/B high speed data interface
- Compliant with JESD204A, JESD204B device subclass 0, and JESD204B device subclass 2
- Up to 3 JESD204 output lanes running up to 4.375Gbps
- Highly configurable JESD204 transmitter

**Family Selection Table on page 37.**

4

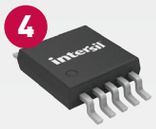

**ISL22313: Integrates a single digitally controlled potentiometer (DCP), control logic and non-volatile memory on a monolithic CMOS integrated circuit.**

- 256 resistor taps
- $I^2C$ serial interface
- Two address pins, up to four devices per bus
- Non-volatile EEPROM storage of wiper position
- 14 General Purpose non-volatile registers

**Family Selection Table on page 35.**

# SIGNAL PATH SELECTION TABLES

## REAL-TIME CLOCK

| Device | Alarms (with the number of alarms) | Time and calendar functions | Frequency out (with the number of frequencies) | Compatible with a 6pF crystal | Very small part | Battery backup feature | Memory (with type and amount) | Event detection | Time stamp | Temperature compensated | Battery monitor and switchover | Unique ID | CPU supervisory functions | Uses AC powerline for timing | Integrated crystal | |
|---|---|---|---|---|---|---|---|---|---|---|---|---|---|---|---|---|
| ISL12057 | 2 | ✓ | 4 | ✓ | | | | | | | | | | | | Basic |
| ISL12058 | 2 | ✓ | 4 | | ✓ | | | | | | | | | | | |
| ISL12059 | | ✓ | 1 | | | | | | | | | | | | | |
| ISL12082 | 1 | ✓ | 4 | | | ✓ | | | | | | | | | | |
| ISL12008 | 1 | ✓ | 1 | | | ✓ | | | | | | | | | | |
| ISL1208 | 1 | ✓ | 15 | | | ✓ | 2 | | | | | | | | | |
| ISL1218 | 1 | ✓ | 15 | | | ✓ | 8 | | | | | | | | | |
| ISL1220 | 1 | ✓ | 15 | | | ✓ | 8 | | | | | | | | | |
| ISL1209 | 1 | ✓ | 15 | | | ✓ | 2 | ✓ | | | | | | | | |
| ISL1219 | 1 | ✓ | 15 | | | ✓ | 2 | ✓ | ✓ | | | | | | | |
| ISL1221 | 1 | ✓ | 15 | | | ✓ | 2 | ✓ | ✓ | | | | | | | |
| ISL12022 | 1 | ✓ | 15 | | | ✓ | 128 | | | ✓ | ✓ | | | | | Feature Rich |
| ISL12023 | 1 | ✓ | 15 | | | ✓ | 128 | | | ✓ | ✓ | | | | | |
| ISL12024/IRTCZ | 2 | ✓ | 15 | | | ✓ | 512 | | | | | ✓ | | | | |
| ISL12025 | 2 | ✓ | | | | ✓ | 512 | | | | | ✓ | ✓ | | | |
| ISL12026 | 2 | ✓ | 3 | | | ✓ | 512 | | | | | | | | | |
| ISL12027A | 2 | ✓ | | | | ✓ | 512 | | | | | | ✓ | | | |
| ISL12028A | 2 | ✓ | 3 | | | ✓ | 512 | | | | | | ✓ | | | |
| ISL12029A | 2 | ✓ | 3 | | | ✓ | 512 | | | | | | ✓ | | | |
| ISL12030 | 2 | ✓ | | | | | 128 | | | | | | | ✓ | | |
| ISL12032 | 2 | ✓ | 7 | | | ✓ | 128 | | | | | | | ✓ | | |
| ISL12022M/MA | 1 | ✓ | 15 | | | ✓ | 128 | | | ✓ | ✓ | | | | ✓ | 3-in-1 (Module) |
| ISL12020M | 1 | ✓ | 15 | | | ✓ | 128 | | | ✓ | ✓ | | | | ✓ | |

To see the complete device listing, visit www.intersil.com

# DIGITAL POTENTIOMETERS

## What is a DCP?

Digitally Controlled Potentiometers are integrated circuits incorporating a resistor ladder with its associated registers, non-volatile or volatile memory, and a digital interface providing direct communication between a host and both the resistor ladder and memory.

### NON-VOLATILE (EEPROM MEMORY)

**Single 16-Tap (4-Bits)**
X9116 - 10kΩ, Up-Down
ISL22512 - 10kΩ, Push Button

**Single 32-Tap (5-Bits)**
[D] X9313 - 1kΩ / 10kΩ / 50kΩ, Up-Down
[D] X9314 - 10kΩ, Log Taper, Up-Down
X9315 - 10kΩ / 50kΩ / 100kΩ, Up-Down
X93154 - 50kΩ, Up-Down, 2-Pin
X93155 - 50kΩ, Up-Down, 2-Pin
X93156 - 12.5kΩ / 50kΩ, Up-Down
[D] X9511 - 10kΩ, Push Button
ISL22511 - 10kΩ / 50kΩ, Push Button

**Single 64-Tap (6-Bits)**
X9429 - 2.5kΩ / 10kΩ, 2-Wire

**Single 100-Tap (~6.65-Bits)**
X9317 - 10kΩ / 50kΩ / 100kΩ, Up-Down
[D] X9C102 - 1kΩ, Up-Down
[D] X9C103 - 10kΩ, Up-Down
[D] X9C104 - 100kΩ, Up-Down
[D] X9C503 - 50kΩ, Up-Down
[D] X9C303 - 32kΩ, Log Taper, Up-Down

**Single 128-Tap (7-Bits)**
ISL22316 - 10kΩ / 50kΩ, I²C
ISL22317 - 10kΩ / 50kΩ / 100kΩ, 1% Tolerance, I²C
[E] ISL95311 - 10kΩ / 50kΩ, I²C
[D] ISL95711 - 10kΩ / 50kΩ, I²C
ISL96017 - 10kΩ / 50kΩ, I²C (16kbits extra EEPROM)
ISL22416 - 10kΩ / 50kΩ, SPI
[E] ISL95310 - 10kΩ / 50kΩ, Up-Down
[D] ISL95710 - 10kΩ / 50kΩ, Up-Down

**Single 256-Tap (8-Bits)**
ISL95810 - 10kΩ / 50kΩ, I²C
ISL95811 - 10kΩ / 50kΩ, I²C
[D] ISL22313 - 10kΩ / 50kΩ / 100kΩ, I²C
[D] ISL22414 - 10kΩ / 50kΩ / 100kΩ, SPI

**Single 1024-Tap (10-Bits)**
[D] X9110 - 100kΩ, SPI
X9111 - 100kΩ, SPI
[D] X9118 - 100kΩ, 2-Wire
X9119 - 100kΩ, 2-Wire

**Dual 32-Tap (5-Bits)**
X93256 - 12.5kΩ / 50kΩ, Up-Down

**Dual 64-Tap (6-Bits)**
[D] X9221A - 10kΩ, 2-Wire

**Dual 128-Tap (7-Bits)**
ISL22326 - 10kΩ / 50kΩ, I²C
ISL22426 - 10kΩ / 50kΩ, SPI

**Dual 256-Tap (8-Bits)**
X95820 - 10kΩ / 50kΩ, I²C
[D] X9268 - 50kΩ / 100kΩ, 2-Wire
[D] ISL22323 - 10kΩ / 50kΩ / 100kΩ, I²C
[D] ISL22424 - 10kΩ / 50kΩ / 100kΩ, SPI

**Quad 64-Tap (6-Bits)**
[D] X9400 - 10kΩ, SPI
X9401 - 10kΩ, SPI
[D] X9241A - 2kΩ / 10kΩ / 50kΩ, 2-Wire
[D] X9408 - 2.5kΩ / 10kΩ, 2-Wire
X9409 - 2.5kΩ / 10kΩ, 2-Wire

**Quad 128-Tap (7-Bits)**
ISL22346 - 10kΩ / 50kΩ, I²C
ISL22446 - 10kΩ / 50kΩ, SPI

**Quad 256-Tap (8-Bits)**
X95840 - 10kΩ / 50kΩ, I²C
[D] X9250 - 50kΩ / 100kΩ, SPI
X9251 - 50kΩ, SPI
X9252 - 2kΩ / 10kΩ, 2-Wire
[D] X9258 - 50kΩ / 100kΩ, 2-Wire
X9259 - 50kΩ, 2-Wire
[D] ISL22343 - 10kΩ / 50kΩ / 100kΩ, I²C
[D] ISL22444 - 10kΩ / 50kΩ / 100kΩ, SPI

### SPECIAL FUNCTION DCPS

**Dual Audio DCP - Integrated Output Buffer Amps and Audio Detect**
ISL22102 - 32kΩ, Log Taper, Push Button, 0 to -72dB Dynamic Range

**Low Voltage 1% Tolerant Precision DCP & Low Temperature Coefficient**
ISL22317 - 10kΩ / 50kΩ / 100kΩ, I²C

**Single 128-Tap DCP with 16kbits General Purpose E2PROM**
ISL96017 - 10kΩ / 50kΩ, I²C

**TFT/LCD Programmable VCOM Calibrator (128 Step)**
ISL45041 - I²C
ISL45042 - Up-Down

**Military Temperature (-55°C to 125°C) Non-Volatile DCP**
ISL22316WM (Single) - 10kΩ, I²C
ISL22326WM (Dual) - 10kΩ, I²C
ISL22346WM (Quad) - 10kΩ, I²C

### VOLATILE (NO EEPROM MEMORY)

**Single 16-Tap (4-Bits)**
ISL23512 - 10kΩ, Push Button

**Single 32-Tap (5-Bits)**
X9015 - 10kΩ / 50kΩ, Up-Down
ISL23511 - 10kΩ / 50kΩ, Push Button
ISL90460 - 100kΩ, Up-Down, Rheostat
ISL90461 - 10kΩ / 50kΩ / 100kΩ, Up-Down, 2-Pin, Rheostat
ISL90462 - 10kΩ / 50kΩ / 100kΩ, Up-Down, 2-Pin, Voltage Divider Only

**Single 128-Tap (7-Bits)**
ISL90726 - 10kΩ / 50kΩ, I²C, Rheostat
ISL90727/28 - 10kΩ / 50kΩ, I²C, Voltage Divide Only
ISL23318 - 10kΩ / 50kΩ / 100kΩ, I²C, Low Voltage
ISL23418 - 10kΩ / 50kΩ / 100kΩ, SPI, Low Voltage
[D] ISL23711 - 10kΩ / 50kΩ, I²C
[D] ISL23710 - 10kΩ / 50kΩ, Up-Down

**Single 256-Tap (8-Bits)**
ISL90810 - 10kΩ / 50kΩ, I²C
ISL23315 - 10kΩ / 50kΩ / 100kΩ, I²C, Low Voltage
ISL23415 - 10kΩ / 50kΩ / 100kΩ, SPI, Low Voltage

**Dual 32-Tap (5-Bits)**
ISL22102 - 32kΩ, Log Taper, Audio Detect, Push Button

**Dual 128-Tap (7-Bits)**
ISL23328 - 10kΩ / 50kΩ / 100kΩ, I²C, Low Voltage
ISL23428 - 10kΩ / 50kΩ / 100kΩ, SPI, Low Voltage

**Dual 256-Tap (8-Bits)**
ISL23325 - 10kΩ / 50kΩ / 100kΩ, I²C, Low Voltage
ISL23425 - 10kΩ / 50kΩ / 100kΩ, SPI, Low Voltage

**Quad 128-Tap (7-Bits)**
ISL23348 - 10kΩ / 50kΩ / 100kΩ, I²C, Low Voltage
ISL23448 - 10kΩ / 50kΩ / 100kΩ, SPI, Low Voltage

**Quad 256-Tap (8-Bits)**
ISL23345 - 10kΩ / 50kΩ / 100kΩ, I²C,Low Voltage
ISL23445 - 10kΩ / 50kΩ / 100kΩ, SPI, Low Voltage
ISL90841 - 10kΩ / 50kΩ, I²C
ISL90842 - 10kΩ / 50kΩ, I²C

[E] Extended positive terminal voltage  [D] Positive and negative terminal voltage

# VOLTAGE REFERENCES

## ULTRA PRECISION

**ISL21009**
- 3ppm/°C
- 4.5µVpp noise
- 5V - 16V input
- 180µA max

**ISL21090**
- 7ppm/°C
- 1µVpp noise
- 3.7V to 36V Input

**ISL21060**
- 10ppm/°C
- 40µA max
- 10µVpp noise

## ULTRA LOW POWER

**ISL60002**
- 700nA max

**X60003**
- 900nA max
- 4.5V to 9V input

**ISL21080**
- 1.5µA max

**ISL21070**
- 25µA max

**ISL21060**
- 40µA max
- 10µVpp noise

## PRECISION $V_{REF}$ WITH KELVIN SENSE

**ISL21060**
- Stable for cap load drive
- 40µA max
- 10µVpp noise

## LOW COST

**ISL60002 D-grade**
- 900nA max

**ISL21080**
- 1.5µA max

**ISL21070**
- 25µA max

**ISL21010**
- 46µA typ

**ISL21007 D-grade**
- 150µA max

**ISL21009 D-grade**
- 180µA max

## $V_{REF}$ WITH COMPARATOR

**ISL21440**
- 0.7µA max
- 1.182V voltage reference

### VOLTAGE REFERENCES

| Device Number | Vout 0.6V | 0.9V | 1.024V | 1.2V | 1.25V | 1.5V | 1.8V | 2.048V | 2.5V | 2.6V | 3V | 3.3V | 4.096V | 5V | 7.5V | Temp Co ppm/°C | Initial Acc % Vout @2.5V | Temp Range °C | Isy Max µA | Vsy Range Volts | Noise Low Freq µVp-p | Noise High Freq µVrms | Line Reg µV/V @ 2.5V | Load Reg µV/mA @2.5V | Iout Source/ Sink mA | Hyst ppm | LTD ppm /1khr | Pkg |
|---|---|---|---|---|---|---|---|---|---|---|---|---|---|---|---|---|---|---|---|---|---|---|---|---|---|---|---|---|
| ISL21009B | | | | | X | | | | X | | | | X | X | | 3 | 0.02 | -40 to 125 | 180 | 3.5 to 16.5 | 4.5 | 2.2 | 150 | 100 | 7/7 | 50 | 50 | SOIC-8 |
| ISL21007C | | | | | X | | | X | X | | X | | | | | 5 | 0.08 | -40 to 125 | 150 | 2.7 to 5.5 | 4.5 | 2.2 | 200 | 100 | 7/7 | 50 | 100 | SOIC-8 |
| ISL21009C | | | | | X | | | | X | | | | X | X | | 5 | 0.08 | -40 to 125 | 180 | 3.5 to 16.5 | 4.5 | 2.2 | 150 | 100 | 7/7 | 50 | 50 | SOIC-8 |
| ISL21090B | | | | | X | | | | X | | | | | X | X | 7 | 0.02 | -40 to 125 | 1280 | 3.7 to 36 | 1 | 1.6 | 45 | 42.5 | 20/10 | TBD | 20 | SOIC-8 |
| ISL21007D | | | | | X | | | X | X | | X | | | | | 10 | 0.08 | -40 to 125 | 150 | 2.7 to 5.5 | 4.5 | 2.2 | 200 | 100 | 7/7 | 50 | 100 | SOIC-8 |
| ISL21009D | | | | | X | | | | X | | | | X | X | | 10 | 0.08 | -40 to 125 | 180 | 3.5 to 16.5 | 4.5 | 2.2 | 150 | 100 | 7/7 | 50 | 50 | SOIC-8 |
| ISL21060B (EN) | | | | | | | | X | X | | X | | X | | | 10 | 0.04 | -40 to 125 | 40 | 2.7 to 5.5 | 10 | 2.5 | 150 | 400 | 10/5 | 100 | 100 | SOT23-6 |
| X60003B | | | | | | | | | | | | | X | X | | 10 | 0.02* | -40 to 85 | 0.9 | 4.5 to 9 | 30 | NA | 150 | 100 | 10/10 | 100 | 45 | SOT23-3 |
| X60003C | | | | | | | | | | | | | X | X | | 20 | 0.05* | -40 to 85 | 0.9 | 4.5 to 9 | 30 | NA | 150 | 100 | 10/10 | 100 | 45 | SOT23-3 |
| ISL60002B | | | X | X | X | | X | X | X | X | X | X | | | | 20 | 0.04 | -40 to 85 | 0.9 | 2.7 to 5.5 | 30 | NA | 350 | 250 | 7/7 | 100 | 50 | SOT23-3 |
| ISL60002C | | | X | X | X | | X | X | X | X | X | X | | | | 20 | 0.10 | -40 to 85 | 0.9 | 2.7 to 5.5 | 30 | NA | 350 | 250 | 7/7 | 100 | 50 | SOT23-3 |
| ISL60002D | | | X | X | X | | X | X | X | X | X | X | | | | 20 | 0.49 | -40 to 85 | 0.9 | 2.7 to 5.5 | 30 | NA | 350 | 250 | 7/7 | 100 | 50 | SOT23-3 |
| X60003D | | | | | | | | | | | | | X | X | | 20 | 0.10* | -40 to 85 | 0.9 | 4.5 to 9 | 30 | NA | 150 | 100 | 10/10 | 100 | 45 | SOT23-3 |
| ISL21060C (EN) | | | | | | | | X | X | | X | | X | | | 25 | 0.10 | -40 to 125 | 40 | 2.7 to 5.5 | 10 | 2.5 | 150 | 400 | 10/5 | 100 | 100 | SOT23-6 |
| ISL21070 | X | | | | | | | X | X | | | | | | | 30 | 0.20 | -40 to 85 | 25 | 2.7 to 5.5 | 30 | 10 | 250 | 100 | 7/10 | 20 | 50 | SOT23-3 |
| ISL21010 | | | X | | X | X | | X | X | | X | X | X | | | 50 | 0.20 | -40 to 125 | 80 | 2.7 to 5.5 | 58* | 26* | 130 | 110 | 25/1 | 100 | 50 | SOT23-3 |
| ISL21080 | | X | X | | X | X | | X | X | | X | X | X | X | | 50 | 0.30 | -40 to 85 | 1.5 | 2.7 to 8 | 30 | 52 | 350 | 350 | 7/7 | 100 | 50 | SOT23-3 |
| ISL21440 | 1.182V ±0.5% with Comparator | | | | | | | | | | | | | | | * | 0.50 | -40 to 125 | 0.7 | 2 to 11 | N/A | N/A | N/A | N/A | 2/0.01 | N/A | N/A | MSOP-8, TDFN-8 |

**To see the complete device listing, visit www.intersil.com**

# CURRENT SENSE AMPLIFIERS

### CURRENT SENSE OP AMPS

| Device | | | Supply Voltage (V) | | Rail-To-Rail | | Vos Max @ 25°C | TCVos Typ | Ib Max @ 25°C | CMRR Min @ 25°C | Is Max @ 25°C | GBW | Slew Rate | Voltage Noise @ 1kHz | Temp Range | Package | | | | | |
|---|---|---|---|---|---|---|---|---|---|---|---|---|---|---|---|---|---|---|---|---|---|
| Single | Dual | Quad | Min | Max | In | Out | mV | µV/°C | nA | dB | mA | MHz | V/µs | nV/ √Hz | °C | SC70 | SOT23 | MSOP | SOIC | TSSOP | DFN/TDFN |
| Standard High Side/Low Side | | | | | | | | | | | | | | | | | | | | | |
| ISL28130C | ISL28230C | ISL28430C | 1.8 | 5.5 | Yes | Yes | 0.04 | 0.02 | 0.25 | 110 | 0.025 | 0.4 | 0.2 | 65 | 0 to 70 | S | S | D | D/Q | Q | |
| ISL28130F | ISL28230F | ISL28430F | 1.8 | 5.5 | Yes | Yes | 0.04 | 0.02 | 0.25 | 110 | 0.025 | 0.4 | 0.2 | 65 | -40 to 125 | S | S | D | S/D | Q | |
| Zero-Drift, High Side/Low Side | | | | | | | | | | | | | | | | | | | | | |
| ISL28134I | | | 2.25 | 6 | Yes | Yes | 0.0025 | 0.0005 | 0.3 | 120 | 0.900 | 3.5 | 1.5 | 10 | -40 to 85 | | | | S | | |
| ISL28133 | ISL28233 | ISL28433 | 1.8 | 5.5 | Yes | Yes | 0.006 | 0.05 | 0.18 | 118 | 0.025 | 0.4 | 0.2 | 65 | -40 to 125 | S | S | D | D/Q | Q | S/D |
| 40V Low Side Only | | | | | | | | | | | | | | | | | | | | | |
| ISL28118 | ISL28218 | | 3 | 40 | Ground | Yes | 0.15 | 0.2 | 575 | 103 | 1.1 | 4 | 1.2 | 5.6 | -40 to 125 | | | S/D | S/D | | |
| ISL28108 | ISL28208 | ISL28408 | 3 | 40 | Ground | Yes | 0.23 | 0.1 | 43 | 105 | 0.25 | 1.2 | 0.45 | 15.8 | -40 to 125 | | | S/D | S/D/Q | | S/D |

### VOLTAGE OUTPUT CURRENT SENSE AMPLIFIERS

| Part Number | Supply Voltage Range | Input Common Mode Range | Vos Max @ 25°C | Vos Max Temp | CMRR min Temp | PSRR min Temp | Gain Range | Gain Accuracy @ 25°C | Gain Accuracy Temp | Is Max @ 25°C | Is Max Temp | GBW | Temp Range | Package |
|---|---|---|---|---|---|---|---|---|---|---|---|---|---|---|
| | V | V | µV | µV | dB | dB | V/V | % | % | µA | µA | kHz | °C | |
| ISL28005 | 2.7 to 28 | 0 to 28 | 500 | 500 | 105 | 90 | 20, 50, 100 | 2 | 3 | 59 | 59 | 180 | -40 to 125 | SOT23 |
| ISL28006 | 2.7 to 28 | 0 to 28 | 250 | 300 | 105 | 90 | 20, 50, 100, Adj (20-100) | 0.7 | 1 | 62 | 62 | 180 | -40 to 125 | SOT23 |

### PRECISION DIGITAL POWER MONITOR

| Part Number | Supply Voltage Range | Input Common Mode Range | Vos Max @ 25°C | CMRR min Temp | PSRR min Temp | Current/Voltage Error Max @ 25°C | ∑ΔADC | Is Max @ 25°C | Temp Range | Package |
|---|---|---|---|---|---|---|---|---|---|---|
| | V | V | µV | dB | dB | % | Bit | mA | °C | |
| ISL28022 | 3 to 5.5 | 0 to 60 | ±75 | 110 | 105 | 0.3 | 16 | 1 | -40 to 125 | 10 Ld MSOP, 16 Ld QFN |

# HIGH SPEED ADC

| MSPS \ Bit | 8-bit | 10-bit | 12-bit | 14-bit | 16-bit |
|---|---|---|---|---|---|
| 500+ | | | 212P50 | 214P50 | |
| | 118P50 | 110P50 | 112P50 | | |
| | | 5510P-50 | 5512P-50 | | |
| 250-350 | 2708L-35<br>2708L-27<br>2708C-27 | | 212P25 | 214P25 | 216P25 |
| | | | 222P25 | 224P25 | |
| | | 5510P-25 | 5512P-25<br>5512HP-25 | 5514P-25 | |
| | | 5610P-25 | 5612P-25 | | |
| 170-210 | 2708L-21<br>2708C-21<br>2708L-17<br>2708C-17 | | 212P20 | 214P20 | 216P20 |
| | | | 222P20 | 224P20 | |
| | | 5510P-21<br>5510P-17 | 5512P-21<br>5512HP-21 | 5514P-21<br>5514P-17 | |
| | | 5610P-21<br>5610P-17 | 5612P-21<br>5612P-17 | | |
| <130 | 2708L-10<br>2708C-10 | | 212P13 | 214P13 | 216P13 |
| | | | 222P13 | 224P13 | |
| | | 5510P-12 | 5512P-12<br>5512HP-12 | 5514P-12 | |
| | | 5610P-12 | 5612P-12 | | |

| Legend |
|---|
| ISLA21x<br>High Performance Single |
| ISLA22x<br>High Performance Dual |
| ISLA11x<br>Low Power Single |
| KAD55xx<br>Low Power Single |
| KAD56xx<br>Low Power Dual |
| KAD27xx<br>1st Generation Single |

# INTERFACE

## RS-232

| Device | $I_S$ Disabled | No. of Tx. | No. of Rx. | Date Rate (kbps) | Rx. Enable Function? | Manual Power-down? | Automatic Power-down? | $V_L$ |
|---|---|---|---|---|---|---|---|---|
| ±15kV ESD Protected, +3V to +5.5V, RS-232 Transmitters/Receivers In QFN Package | | | | | | | | |
| ISL4238E | 10nA | 5 | 3 | 250 | No | Yes | Yes | No |
| ISL4243E | 10nA | 3 | 5 | 250 | No | Yes | Yes | No |
| ISL4221E | 150nA | 1 | 1 | 250 | Yes | Yes | Yes | No |
| ISL3232E | 150nA | 2 | 2 | 250 | No | No | No | No |
| ISL4223E | 150nA | 2 | 2 | 250 | Yes | Yes | Yes | No |
| ISL4260E | 150nA | 3 | 2 | 250 | No | Yes | Yes | No |
| ISL3241E | 1µA | 3 | 5 | 250 | Yes | Yes | No | Yes |
| ISL3243E | 1µA | 3 | 5 | 250 | No | Yes | No | Yes |
| ISL4270E | 300µA | 3 | 3 | 250 | No | Yes | Yes | No |

## RS-485/422

### +3V TO +5V, RS-485/422 TRANSCEIVERS, TRANSMITTERS, RECEIVERS

| Device | 5V | 3V | Dr | Rec | Half Dup | Full Dup | SRL kbps | Hi Speed Mbps | 125C temp | FailSafe Open | Fract UL | High ESD | Hot Plug |
|---|---|---|---|---|---|---|---|---|---|---|---|---|---|
| Basic Features | | | | | | | | | | | | | |
| ISL848x | Y | | 1 | 1 | Y | Y | 250 | 5 | | Y | 32 | | |
| ISL848xE | Y | | 1 | 1 | Y | Y | 250 | 5 | 8485E | Y | 32 | 15kV HBM | |
| ISL4485E | Y | | 1 | 1 | Y | | | 20 | | Y | 32 | 15kV HBM | |
| ISL4489/91E | Y | | 1 | 1 | | Y | 250 | 15 | | Y | 256 | 15kV HBM | |
| ISL8x487 | Y | | 1 | 1 | Y | | 250 | 5 | | Y | 256 | | |
| ISL8348x | | Y | 1 | 1 | Y | Y | 250 | 10 | | Y | 32 | | |
| ISL43485 | | Y | 1 | 1 | Y | | | 30 | | Y | 32 | | |
| ISL81485/86 | Y | | 1 | 1 | Y | | | 30 | | Y | 32 | | |
| ISL4486 | Y | | 1 | 1 | Y | | | 40 | | Y | 32 | | |

| Device | 5V | 3V | Dr | Rec | Half Dup | Full Dup | SRL kbps | Hi Speed Mbps | 125C temp | Full Fail Safe | Fract UL | High ESD | Hot Plug |
|---|---|---|---|---|---|---|---|---|---|---|---|---|---|
| Enhanced Features | | | | | | | | | | | | | |
| ISL8308xE | Y | | 1 | 1 | Y | Y | 115/ 500 | 10 | | Y | 256 | 15kV HBM | Y |
| ISL8307xE | | Y | 1 | 1 | Y | Y | 250/500 | 20 | | Y | 256 | 15kV HBM | Y |
| ISL315xE | Y | | 1 | 1 | Y | Y | 115/1M | 20/40 | 3159 | Y | 256 | IEC61000 | Y |
| ISL317xE | | Y | 1 | 1 | Y | Y | 250/500 | 20/40 | 3179 | Y | 256 | IEC61000 | Y |
| ISL328xE | Y | Y | | 1 | | | | 20 | Y | Y | 256 | IEC61000 | |
| ISL329xE | Y | Y | 1 | | | | 250/500 | 20 | Y | | 256 | IEC61000 | Y |
| ISL32x73/5/7E | Y | Y | | 4 | | | | 80 | Y | | 128 | IEC61000 | |
| ISL32x72/4E | Y | Y | 4 | | | | 460 | 10/32 | Y | | 256 | IEC61000 | Y |
| ISL3259E | Y | | 1 | 1 | Y | | | 100 | Y | Y | 160 | IEC61000 | Y |

| Device | 5V | 3V | Dr | Rec | Half Dup | Full Dup | SRL kbps | Hi Speed Mbps | Wide Vcm | Full Fail Safe | Fract UL | High ESD | Hot Plug |
|---|---|---|---|---|---|---|---|---|---|---|---|---|---|
| Over Voltage Protected to 60V | | | | | | | | | | | | | |
| ISL3149xE | Y | | 1 | 1 | Y | Y | 250/1000 | 15 | ±25 | Y | 128 | | Y |
| ISL3148xE | Y | | 1 | 1 | Y | Y | 1000 | | ±25/ Polarity reversal | Y | 128 | | Y |
| ISL3147xE | Y | | 1 | 1 | Y | Y | 250/1000 | 15 | ±15 | Y | 128 | | Y |
| ISL3245xE | | Y | 1 | 1 | Y | Y | 250/1000 | | ±20 | Y | 128 | 15kV HBM | |
| ISL3249x | Y | | 1 | 1 | Y | Y | 250/1000 | 15 | ±25 | Y | 128 | 15kV HBM | Y |
| ISL3248x | Y | | 1 | 1 | Y | Y | 1000 | | ±25/ Polarity reversal | Y | 128 | 15kV HBM | Y |
| ISL3247x | Y | | 1 | 1 | Y | Y | 250/1000 | 15 | ±15 | Y | 128 | 15kV HBM | Y |

**To see the complete device listing, visit www.intersil.com**

# PROFILE

Intersil formed in August 1999 when we acquired the semiconductor business of Harris Corporation which held product portfolios and intellectual property from RCA and GE Solid State.

## QUICK FACTS

Founded .....1967
Headquarters..... Milpitas, CA
President, CEO..... Necip Sayiner
Employes.....1,100
NASDAQ Listing..... ISIL
FY 2012 Sales.....$608 million
Unexpired U.S. Patents.....1,000+
Number of Products .....3,000+

## MAIN OFFICES

**North America - West Coast**
1001 Murphy Ranch Road
Milpitas, CA 95035
TEL:1-888-INTERSIL (468-3774

**North America - East Coast**
1650 Robert J. Conlan Blvd
NE Palm Bay, FL 32905
TEL: 321-724-7000
FAX: 321-729-7320

**Europe**
Oskar-Messter-Str. 29
D-85737 Ismaning, Germany
TEL: +49-89-46263-0

**Asia Pacific**
Suite 701, Han Tang Building
Overseas Chinese Town
Shenzhen 518053, P.R. China
TEL: +86-755-8246-5118

**Japan**
6F, Mita Nitto Daibiru
3-11-36, Mita, Minato-ku
Tokyo, 108-0073, Japan
TEL: +81-3-5439-2311

## PRODUCT GROUPS

**Mobile Power**
Computing PC
Consumer Handheld
Consumer Display

**Industrial and Infrastructure**
Wired and Wireless Infrastructure
Servers and Storage
Industrial

**Precision Products**
Automotive
RadHard and Aerospace
High Precision Analog

**Specialty Products**
Security and Surveillance
Motion and Light Sensing
Specialty Analog

## RELIABLE AND PROVEN SUPPLY CHAIN

Proven proprietary processes and package technologies, shipping over 1 billion ICs per year

Multi-sourcing strategy using multiple, leading-edge semiconductor foundries and assembly/test partners assures dependable supply

Decades of experience handling military/space products with wafer-by-wafer assurance testing for both high-dose and low-dose radiation

ISO/TS16949 and AEC-Q100, MIL-PRF-38535 compliant and 100% burned in

## A HERITAGE OF INNOVATION

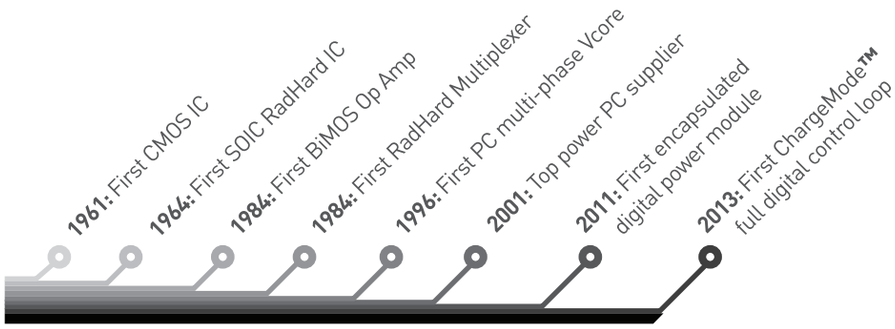


## WORLD-CLASS QUALITY AND FAILURE ANALYSIS SUPPORT

**Quality**
Company-wide zero defect mindset

Quality performance at less than 1.4 DDPM (defective parts per million) and improving

Built-in reliability philosophy with supplier partnerships with industry leaders

Top ratings from customers on quality

Worldwide dedicated quality support

**Failure Analysis**
Worldwide failure analysis support with over a combined 150 years of experience

Extensive in-house capability utilizing state-of-the-art imaging equipment and highly integrated electrical and physical fault isolation techniques and equipment

Design edit capability for quick design verification

LC-113.0 © 2014 Intersil Americas LLC. All Rights Reserved. Intersil (and design) is a trademark owned by Intersil Corporation or one of its subsidiaries. All other trademarks mentioned are the property of their respective owners.